# Casto 150 T1 L



Quiet axial extract fans

- Sound pressure level LpA at 3 m: 35
- Impeller type: Mixed-flow
- Casing material: Plastic
- Backdraft protection: Backdraft damper
- Timer: Turn off timer, Turn on timer

| | Unit of measurement | Casto 150 T1 L |
|---|---|---|
| Maximum supply voltage | V | 240 |
| Minimum supply voltage | V | 220 |
| Power supply frequency | Hz | 50 |
| Rated power | W | 28 |
| Unit current | A | 0.21 |
| Maximum airflow | $m^3/h$ | 255 |
| Sound pressure level LpA at 3 m | dB(A) | 35 |
| Weight | kg | 0.97 |
| Ambient air temperature min | °C | 1 |
| Ambient air temperature max | °C | 40 |
| Ingress protection rating | - | IP44 |
| Impeller material | - | Plastic |

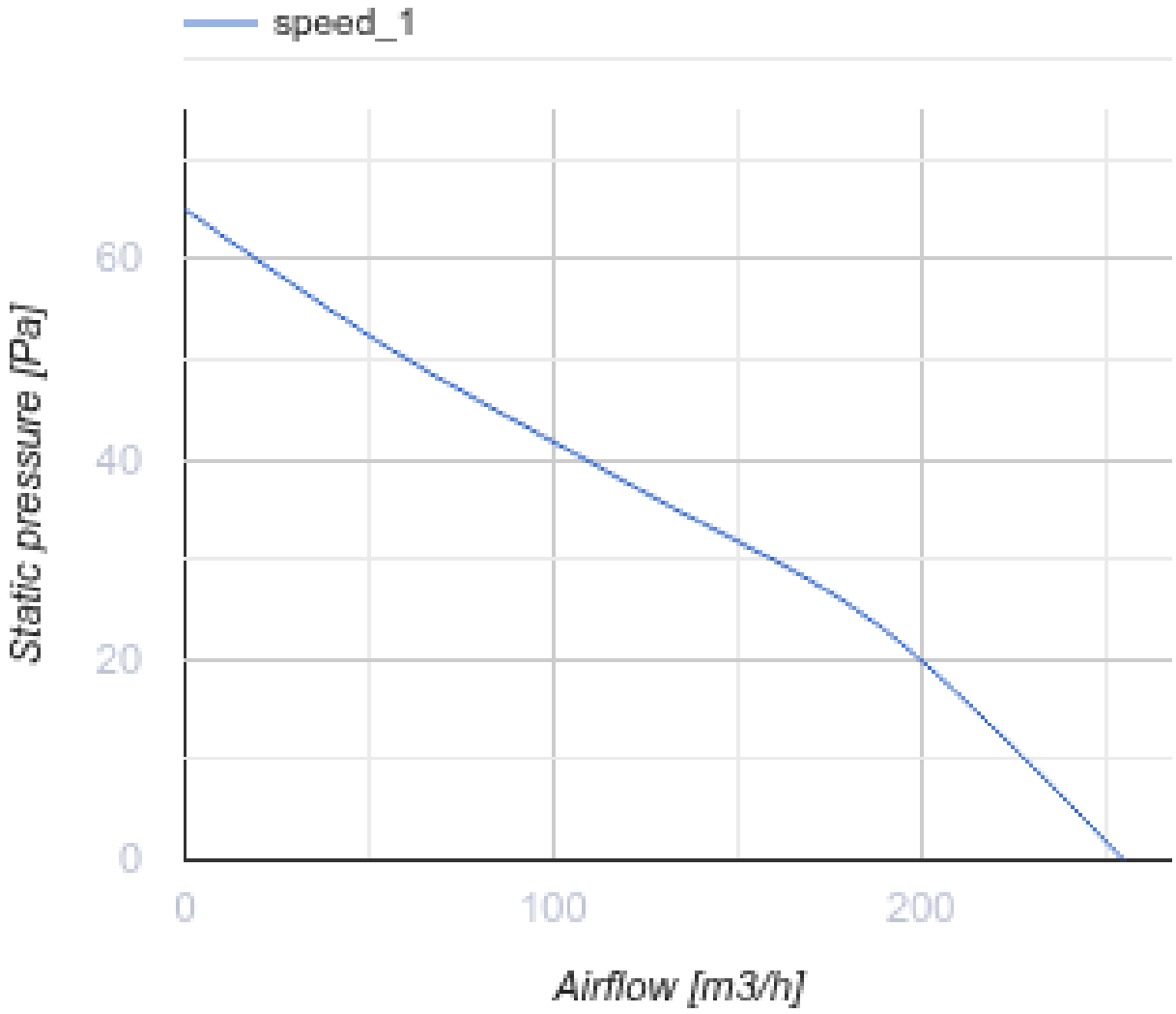


## Dimensions

| D | B | L | L1 |
|---|---|---|---|
| 148 | 206 | 112 | 23 |

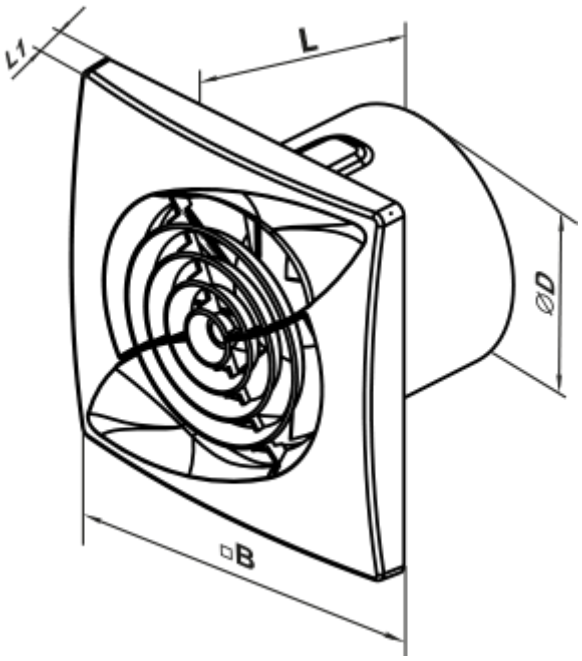


## Accessories

### Plastic

| Name | Photo | Description |
|---|---|---|
| MV 150 V |  | Two-piece plastic grilles with angled louvers, round flange |

### Fittings

| Name | Photo | Description |
|---|---|---|
| PVT 050/10 |  | The adhesive PVC tape is an insulation tape made of plasticized PVC base covered with a glue layer |
| PVT 050/30 |  | The adhesive PVC tape is an insulation tape made of plasticized PVC base covered with a glue layer |
| PVT 050/50 |  | The adhesive PVC tape is an insulation tape made of plasticized PVC base covered with a glue layer |
| C 150 |  | The clamps are designed for quick and reliable mounting and connection of various round ventilation system components. Clamps are made of stainless steel band |

### Flat duct

| Name | Photo | Description |
|---|---|---|

| | | |
|---|---|---|
| 3805 |  | Wall mounting |

### Flexible ducts

| Name | Photo | Description |
|---|---|---|
| Polyvent N |  | Flexible uninsulated air duct made of metallized film |

### Backdraft dampers

| Name | Photo | Description |
|---|---|---|
| KO 150 |  | Back valve is designed for domestic fan |

### Window vents

| Name | Photo | Description |
|---|---|---|
| PO 400 |  | Window ventilators for supply ventilation |

### Plastic

| Name | Photo | Description |
|---|---|---|
| MV 152 VK |  | Supply and exhaust hoods |

### Metal

| Name | Photo | Description |
|---|---|---|
| MVM 152 V N |  | Exhaust metal hoods |