Casto 100-12 L



Quiet axial extract fans

- Sound pressure level LpA at 3 m: 28
- Impeller type: Mixed-flow
- Casing material: Plastic
- Backdraft protection: Backdraft damper

	Unit of measurement	Casto 100-12 L
Maximum supply voltage	V	12
Minimum supply voltage	V	12
Power supply frequency	Hz	50
Rated power	W	8
Unit current	A	1.02
Maximum airflow	m^3/h	85
Sound pressure level LpA at 3 m	dB(A)	28
Weight	kg	0.45
Ambient air temperature min	°C	1
Ambient air temperature max	°C	40
Ingress protection rating	-	IP44
Impeller material	-	Plastic

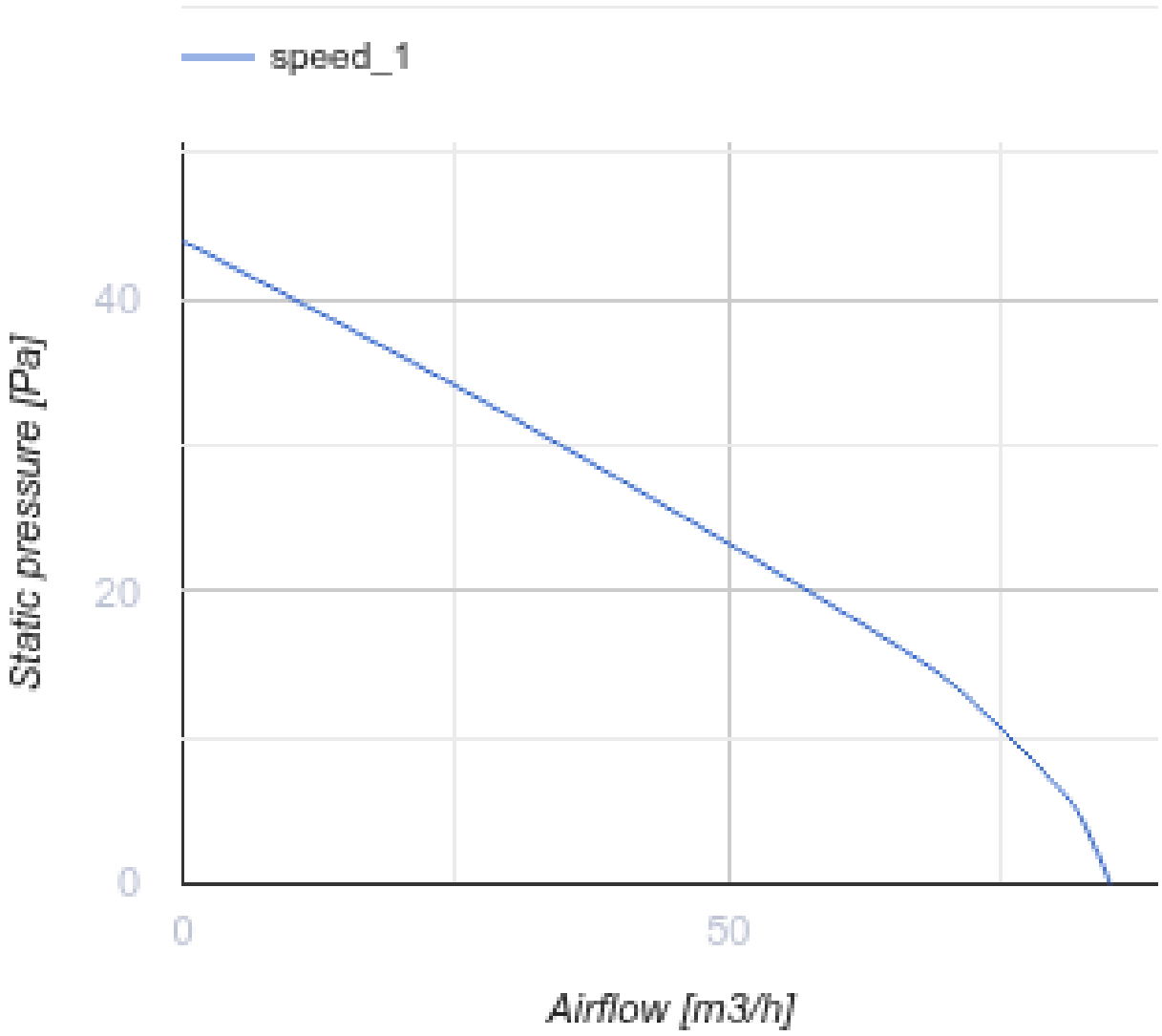

Dimensions

D	B	L	L1
99	150	79	23

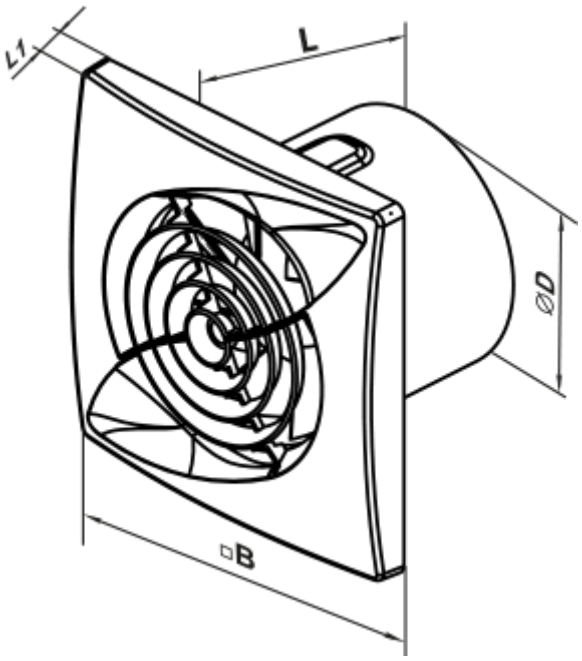

Accessories

Plastic

Name	Photo	Description
MV 100 V		Two-piece plastic grilles with angled louvers

Fittings

Name	Photo	Description
PVT 050/10		The adhesive PVC tape is an insulation tape made of plasticized PVC base covered with a glue layer
PVT 050/30		The adhesive PVC tape is an insulation tape made of plasticized PVC base covered with a glue layer
PVT 050/50		The adhesive PVC tape is an insulation tape made of plasticized PVC base covered with a glue layer
C 100		The clamps are designed for quick and reliable mounting and connection of various round ventilation system components. Clamps are made of stainless steel band

Flat duct

Name	Photo	Description

1805		Wall mounting

Flexible ducts

Name	Photo	Description
Polyvent N		Flexible uninsulated air duct made of metallized film

Backdraft dampers

Name	Photo	Description
KO 100		Back valve is designed for domestic fan
KO1 100		Back valve is designed for domestic fan

Window vents

Name	Photo	Description
PO 400		Window ventilators for supply ventilation

Plastic

Name	Photo	Description
MV 102 VK		Supply and exhaust hoods

Metal

Name	Photo	Description
MVM 102 V N		Exhaust metal hoods