Boost-I 400 EC Un



Mixed-flow inline fans in sound-insulated casings with EC-motors

- Sound pressure level LpA at 3 m: 49
- Sound-insulated casing
- Control: Speed controller
- Impeller type: Mixed-flow
- Casing material: Galvanized steel
- Installation in any position
- Temperature sensor: Remote

	Unit of measurement	Boost-I 400 EC Un
Connected air duct size	mm	400
Phases	-	1
Minimum supply voltage	V	230
Maximum supply voltage	V	230
Power supply frequency	Hz	50/60
Rated power	W	726
Unit current	A	4.8
Maximum airflow	m³/h	5415
Rotation speed at 50hz	-	2580
Sound pressure level LpA at 3 m	dB(A)	49
Weight	kg	22.8
Transported air temperature (max)	°C	55
Transported air temperature (min)	°C	-25
Ambient air temperature min	°C	1
Ambient air temperature max	°C	40
Ingress protection rating	-	IPX4
Ingress protection rating of the drive	-	IP44
Impeller material	-	Plastic

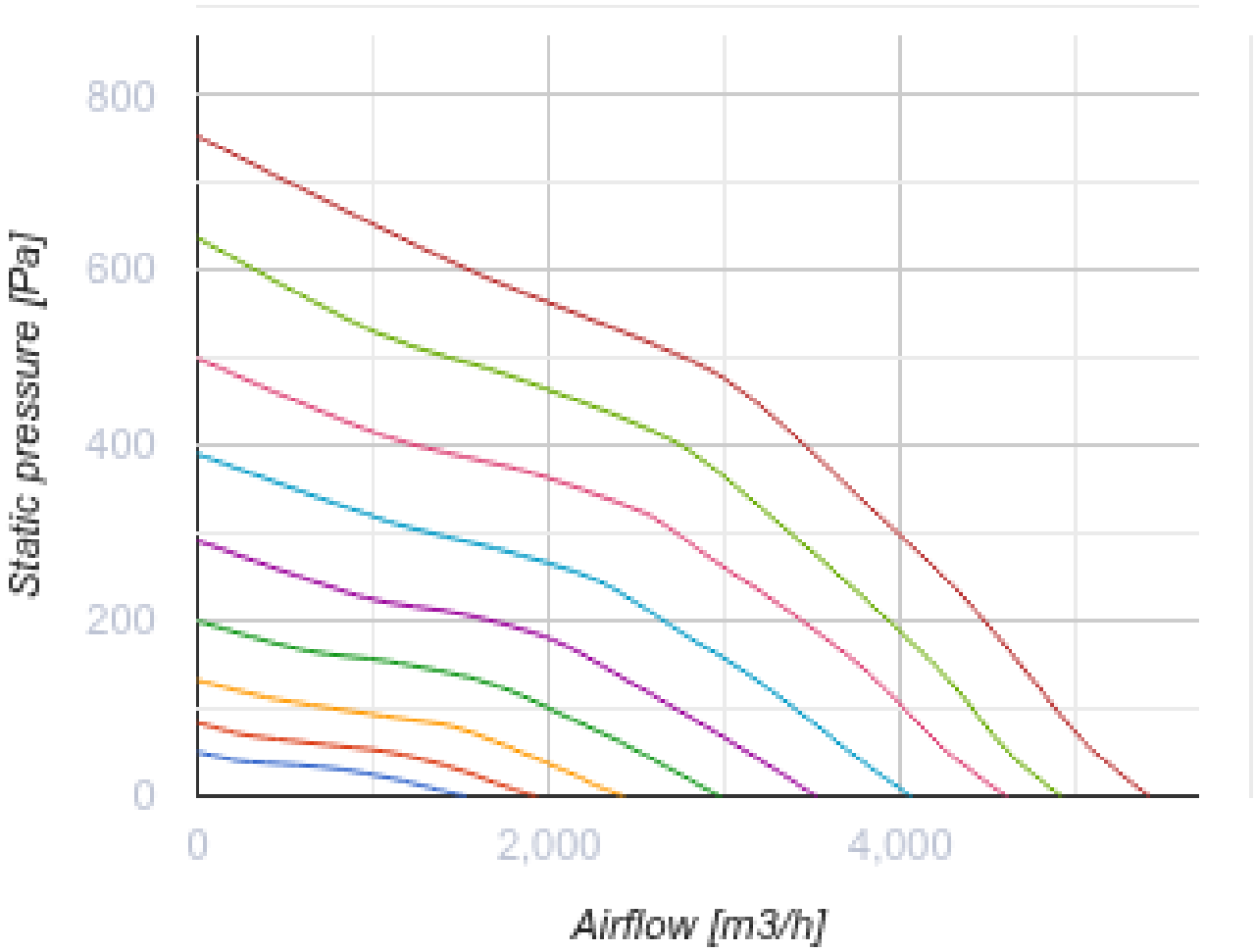
800
600
400
200
0
Static pressure [Pa]
0
2,000
4,000
Airflow [m3/h]

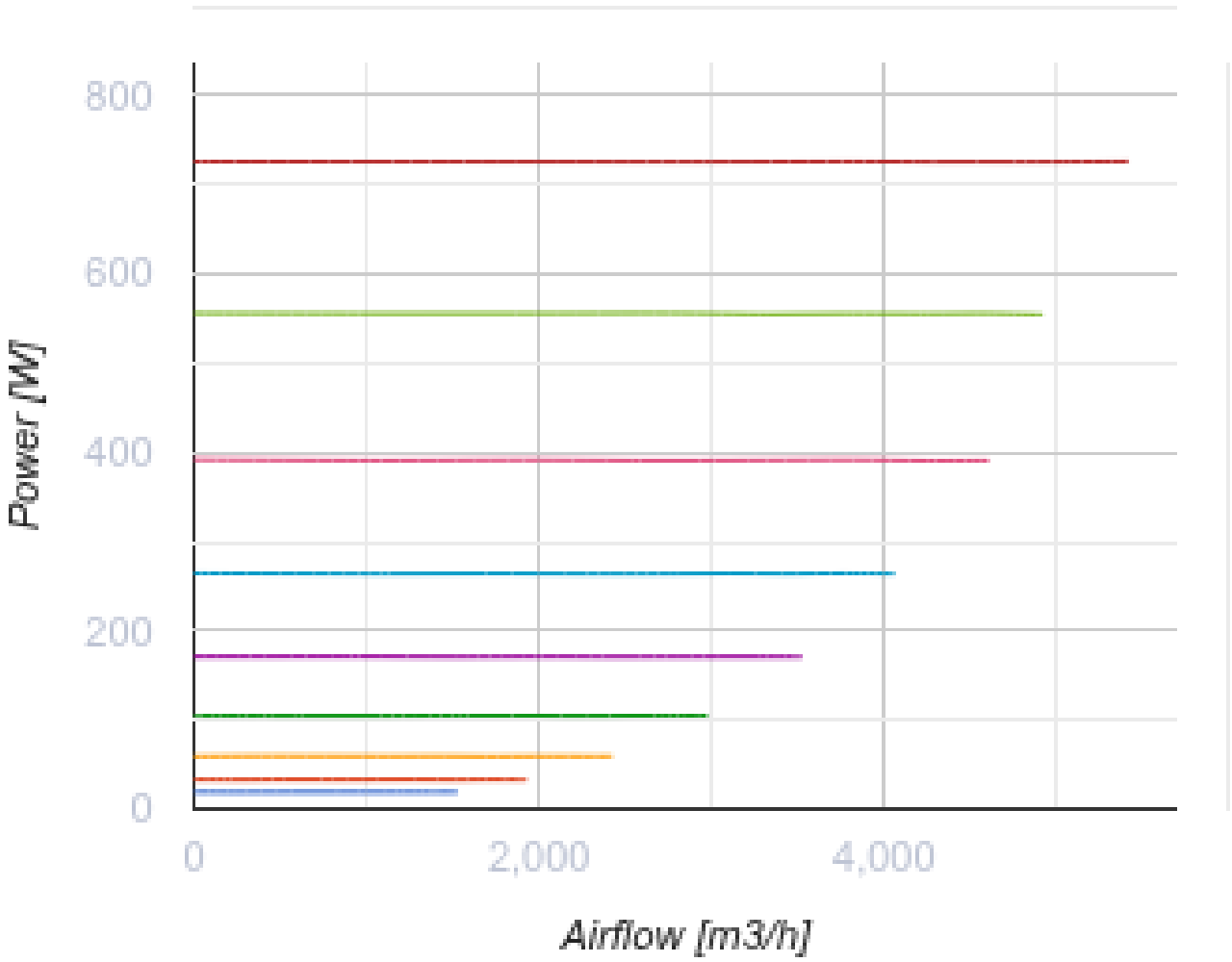

Dimensions

Ø D	Ø D1	B	L	L1
399	460	517	648	785

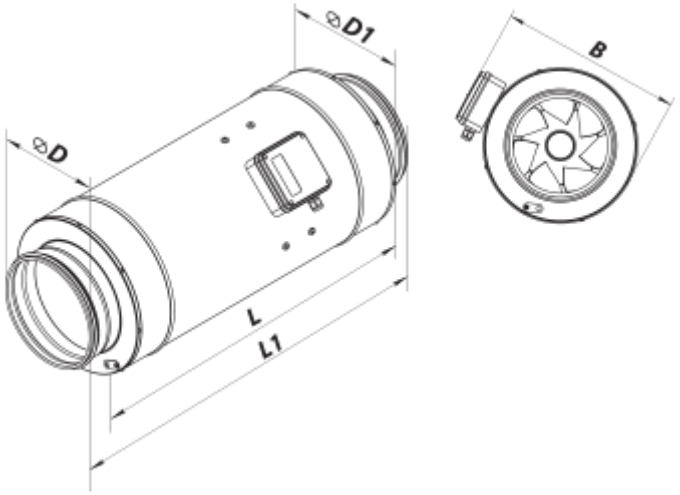

Accessories

For round ducts

Name	Photo	Description
SR 400/900		Silencers made of galvanized steel filled with non-combustible sound-absorbing material
SR 400/1200		Silencers made of galvanized steel filled with non-combustible sound-absorbing material

For round ducts

Name	Photo	Description
KR 400		Air dampers for controlling air flow in round air ducts
KRV 400		Air dampers for automatic air flow control in round ducts

For round ducts

Name	Photo	Description
VVG 400	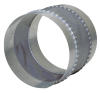	Flexible anti-vibration inserts for round ducts
VVGF 400		Flexible anti-vibration inserts with flanges for round air ducts

Speed controllers

Name	Photo	Description

R-1/010		Speed controller for EC motors

Ecodesign

Trademark	Vents
Model	Boost-I 400 EC Un
Type of drive installed	Integrated VSD
Type of heat recovery system	None
Nominal external pressure (Pa)	0
Maximum external leakage rates (%)	0
Static efficiency (%)	0
Declared typology	NRVU UVU
Sound power level (dB(A))	0
Effective electric power input (kW)	0