Boost-I 355 R

Mixed-flow inline fans in sound-insulated casing

- Sound pressure level LpA at 3 m: 1470
- Sound-insulated casing
- Impeller type: Mixed-flow
- Casing material: Galvanized steel
- Installation in any position
- Cable with mains plug



	Unit of measurement	Boost-I 355 R		
Speed	-	1	2	3
Connected air duct size	mm	355		
Phases	-	1		
Minimum supply voltage	V	230		
Maximum supply voltage	V	230		
Power supply frequency	Hz	50		
Rated power	W	126	131	150
Unit current	A	0.60	0.58	0.66
Maximum airflow	m³/h	1986	2170	2360
Rotation speed at 50hz	-	1350	1400	1470
Sound pressure level LpA at 3 m	dB(A)	1350	1400	1470
Weight	kg	20.7		
Transported air temperature (max)	°C	55		
Transported air temperature (min)	°C	-25		
Ambient air temperature min	°C	1		
Ambient air temperature max	°C	40		
Ingress protection rating	-	IPX4		
Ingress protection rating of the drive	-	IP20		
Impeller material	-	Plastic		

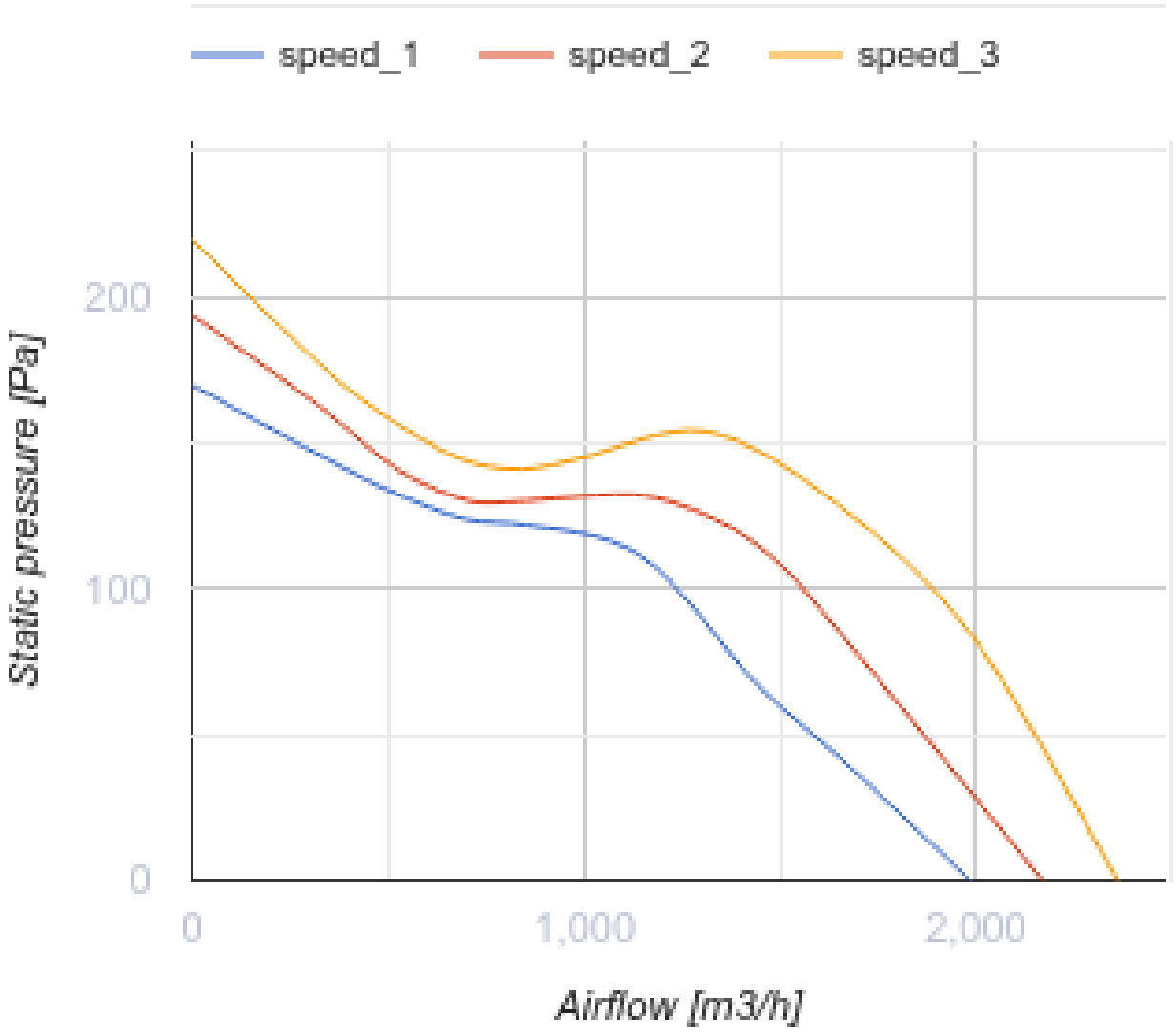
speed_1
speed_2
speed_3
200
100
0
Static pressure [Pa]
0
1,000
2,000
Airflow [m3/h]

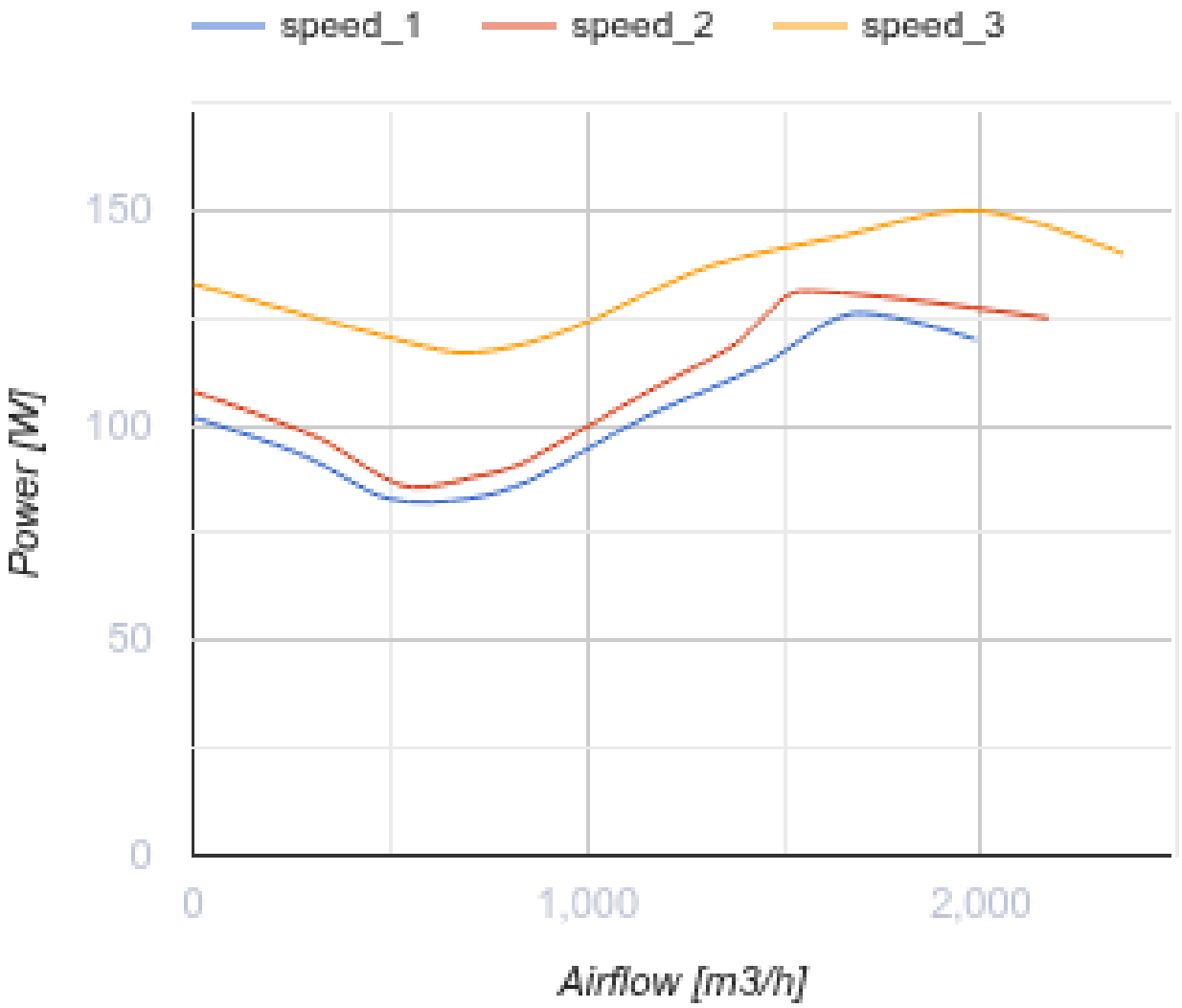

Dimensions

Ø D	Ø D1	B	L	L1
354	412	471	601	739

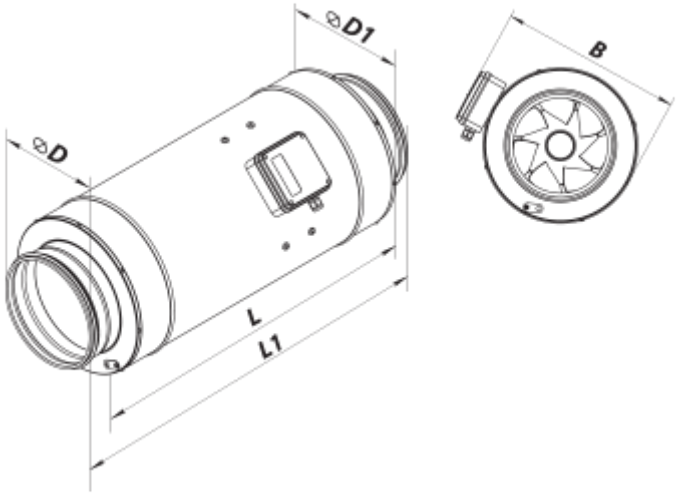

Accessories

For round ducts

Name	Photo	Description
SR 355/600		Silencers made of galvanized steel filled with non-combustible sound-absorbing material
SR 355/900		Silencers made of galvanized steel filled with non-combustible sound-absorbing material
SR 355/1200		Silencers made of galvanized steel filled with non-combustible sound-absorbing material

For round ducts

Name	Photo	Description
KOM1 355		Backdraught gravity damper for shutting off air flow in round air ducts
KR 355		Air dampers for controlling air flow in round air ducts
KRV 355		Air dampers for automatic air flow control in round ducts

For round ducts

Name	Photo	Description

VVG 355	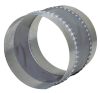	Flexible anti-vibration inserts for round ducts

Thyristor speed controllers

Name	Photo	Description
RS-1-400		Speed controller
RS-3,0-T		Applied in ventilation systems for speed switching ON/OFF and speed control of single-phase power-controlled motors
RS-5,0-T		Applied in ventilation systems for speed switching ON/OFF and speed control of single-phase power-controlled motors
RS-10,0-T		Applied in ventilation systems for speed switching ON/OFF and speed control of single-phase power-controlled motors

Speed controllers

Name	Photo	Description
RS-1,5-PS		Used in ventilation systems for switching on/off and speed control of single-phase fan motors with voltage control
RS-2,5-PS		Used in ventilation systems for switching on/off and speed control of single-phase fan motors with voltage control
RS-4,0-PS		Used in ventilation systems for switching on/off and speed control of single-phase fan motors with voltage control

Speed control switches

Name	Photo	Description
P3-1-300		Switch

Ecodesign

Trademark	Vents
Model	Boost-I 355 R
Type of drive installed	Integrated VSD
Type of heat recovery system	None
Nominal external pressure (Pa)	0
Maximum external leakage rates (%)	0
Static efficiency (%)	0
Declared typology	NRVU UVU
Effective electric power input (kW)	0
Sound power level (dB(A))	0