Boost-I 355 EC R



Mixed-flow inline fans in sound-insulated casings with EC-motors

- Sound pressure level LpA at 3 m: 48
- Sound-insulated casing
- Impeller type: Mixed-flow
- Casing material: Galvanized steel
- Installation in any position
- Cable with mains plug

	Unit of measurement	Boost-I 355 EC R
Connected air duct size	mm	355
Phases	-	1
Minimum supply voltage	V	230
Maximum supply voltage	V	230
Power supply frequency	Hz	50/60
Rated power	W	353
Unit current	A	1.56
Maximum airflow	m^3/h	3500
Rotation speed at 50hz	-	2470
Sound pressure level LpA at 3 m	dB(A)	48
Weight	kg	20.7
Transported air temperature (max)	°C	55
Transported air temperature (min)	°C	-25
Ambient air temperature min	°C	1
Ambient air temperature max	°C	40
Ingress protection rating	-	IPX4
Ingress protection rating of the drive	-	IP44
Impeller material	-	Plastic

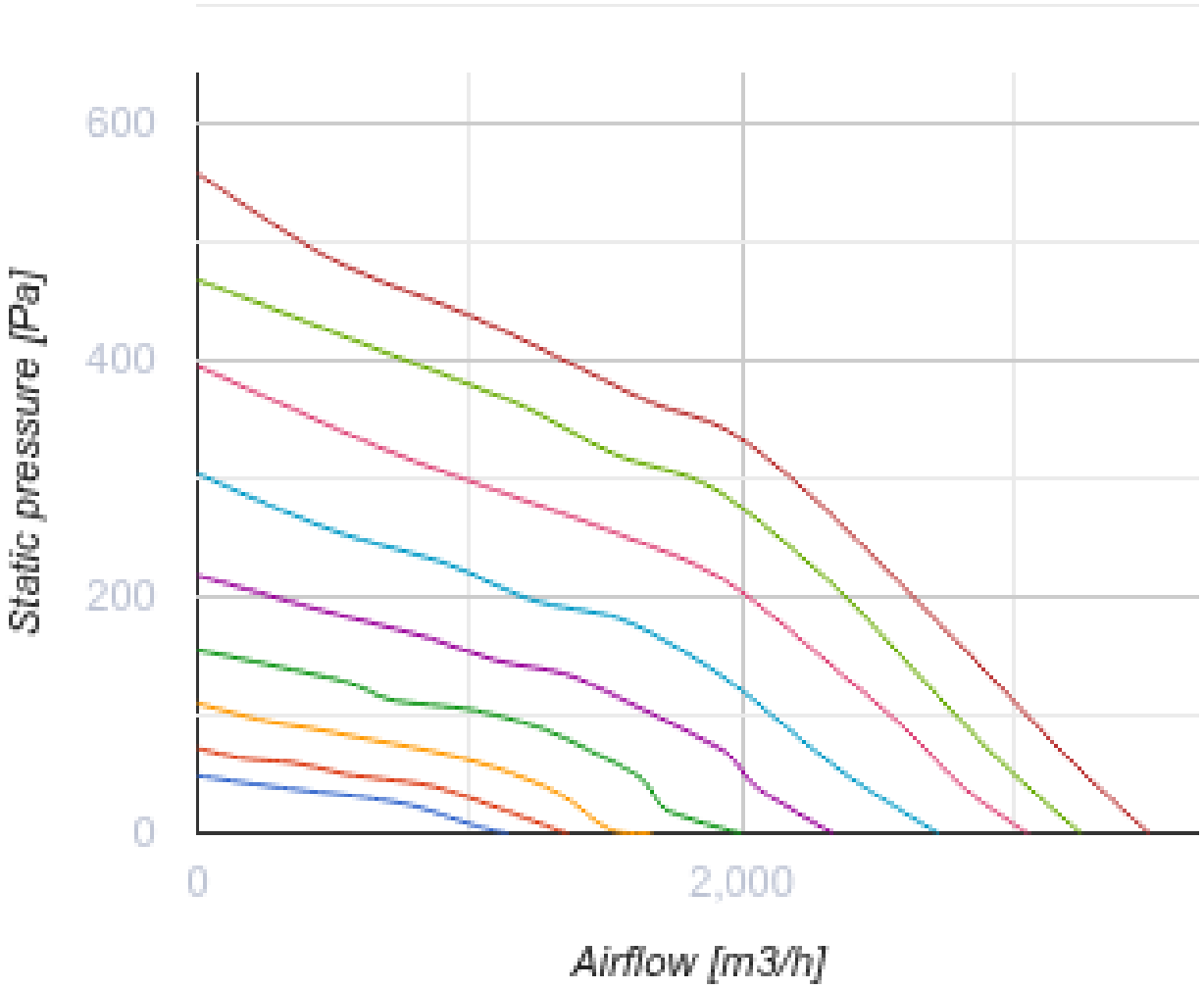
600
400
200
0
Static pressure [Pa]
0
2,000
Airflow [m3/h]

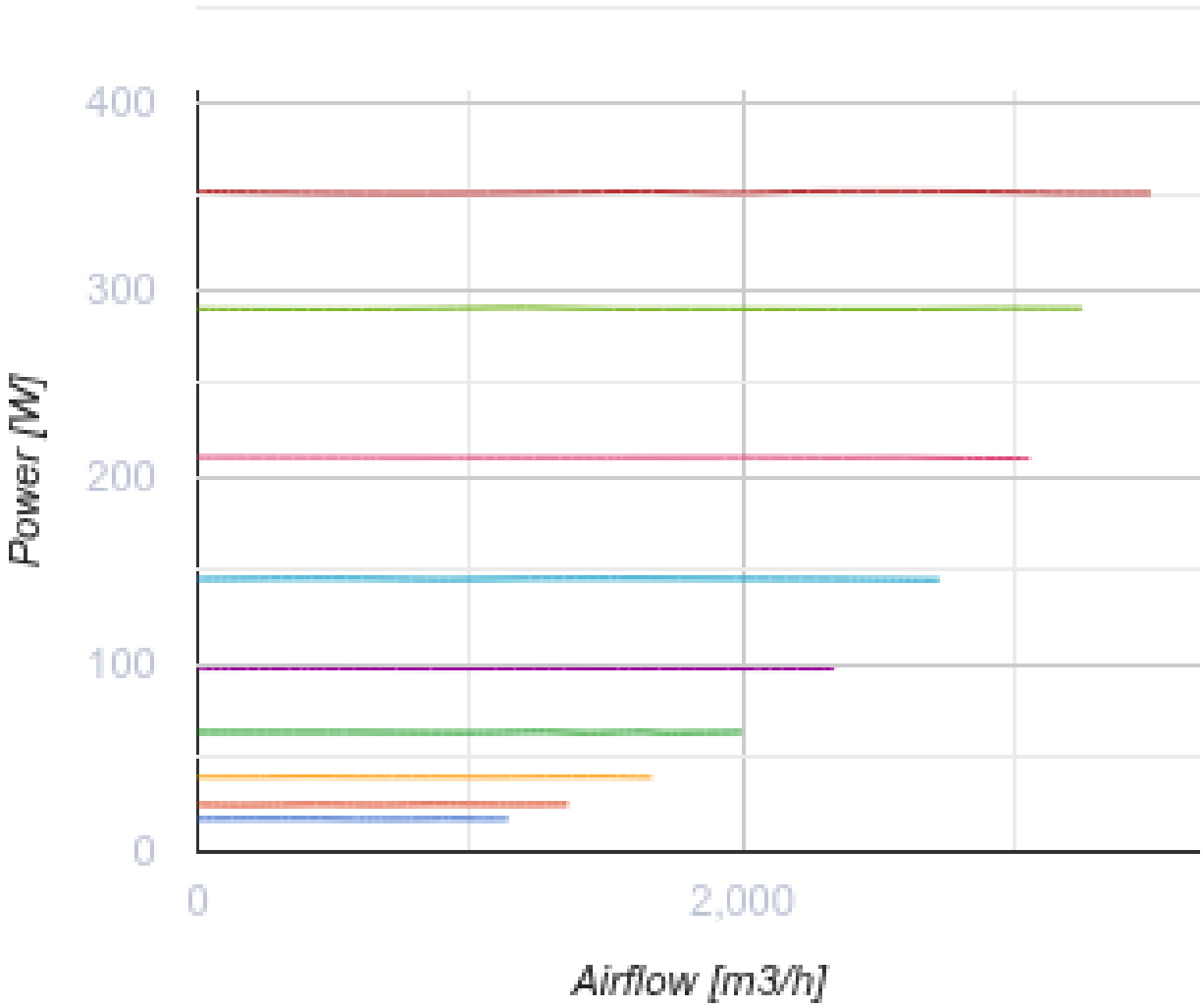

Dimensions

Ø D	Ø D1	B	L	L1
354	412	471	601	739

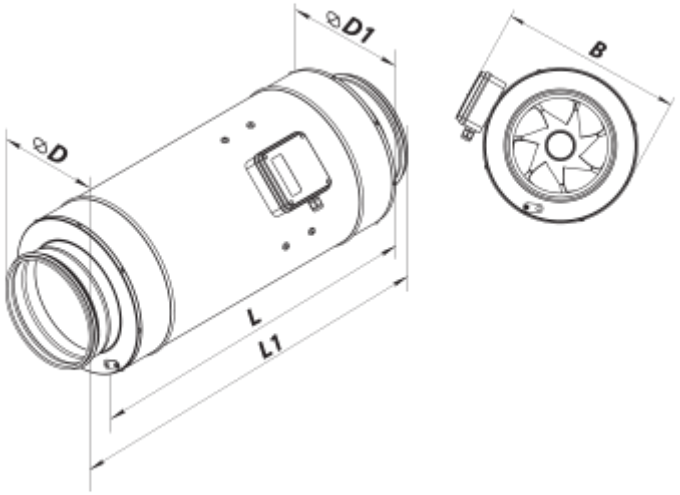

Accessories

For round ducts

Name	Photo	Description
SR 355/600		Silencers made of galvanized steel filled with non-combustible sound-absorbing material
SR 355/900		Silencers made of galvanized steel filled with non-combustible sound-absorbing material
SR 355/1200		Silencers made of galvanized steel filled with non-combustible sound-absorbing material

For round ducts

Name	Photo	Description
KOM1 355		Backdraught gravity damper for shutting off air flow in round air ducts
KR 355		Air dampers for controlling air flow in round air ducts
KRV 355		Air dampers for automatic air flow control in round ducts

For round ducts

Name	Photo	Description

VVG 355	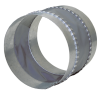	Flexible anti-vibration inserts for round ducts

Speed controllers

Name	Photo	Description
R-1/010		Speed controller for EC motors

Ecodesign

Trademark	Vents
Model	Boost-I 355 EC R
Type of drive installed	Integrated VSD
Type of heat recovery system	None
Nominal external pressure (Pa)	0
Maximum external leakage rates (%)	0
Static efficiency (%)	0
Sound power level (dB(A))	0
Effective electric power input (kW)	0
Declared typology	NRVU UVU