Boost-I 250 P



Mixed-flow inline fans in sound-insulated casing

- Sound pressure level LpA at 3 m: 45
- Sound-insulated casing
- Control: Built-in speed controller
- Impeller type: Mixed-flow
- Casing material: Galvanized steel
- Installation in any position

	Unit of measurement	Boost-I 250 P		
Speed	-	1	2	3
Connected air duct size	mm	250		
Phases	-	1		
Minimum supply voltage	V	230		
Maximum supply voltage	V	230		
Power supply frequency	Hz	50		
Rated power	W	144	173	188
Unit current	A	0.70	0.81	0.84
Maximum airflow	m³/h	1007	1404	1670
Rotation speed at 50hz	-	2292	2626	2876
Sound pressure level LpA at 3 m	dB(A)	38	43	45
Weight	kg	9.8		
Transported air temperature (max)	°C	55		
Transported air temperature (min)	°C	-25		
Ambient air temperature min	°C	1		
Ambient air temperature max	°C	40		
Ingress protection rating	-	IPX4		
Ingress protection rating of the drive	-	IP20		
Impeller material	-	Plastic		

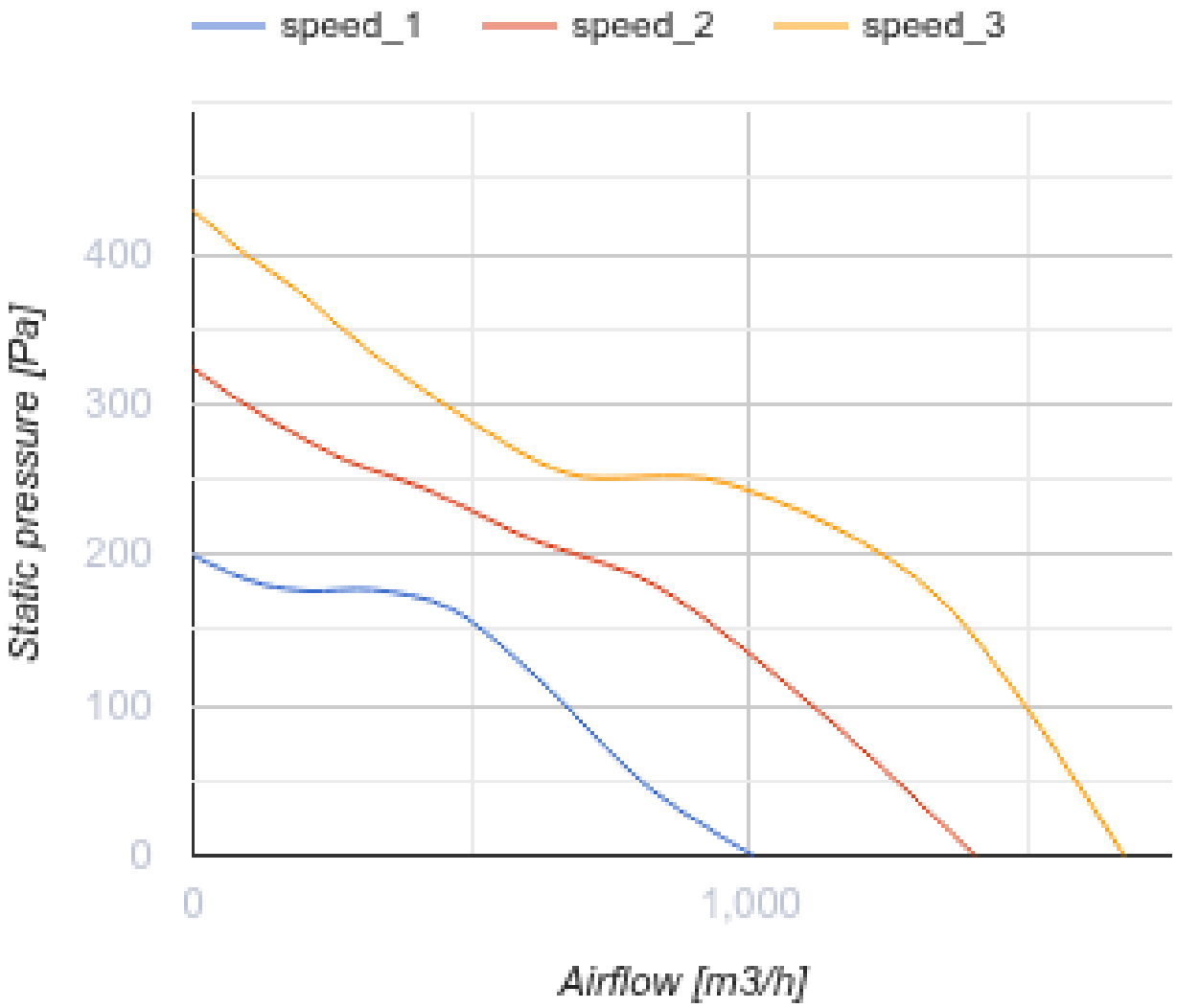
speed_1
speed_2
speed_3
Static pressure [Pa]
400
300
200
100
0
0
1,000
Airflow [m3/h]

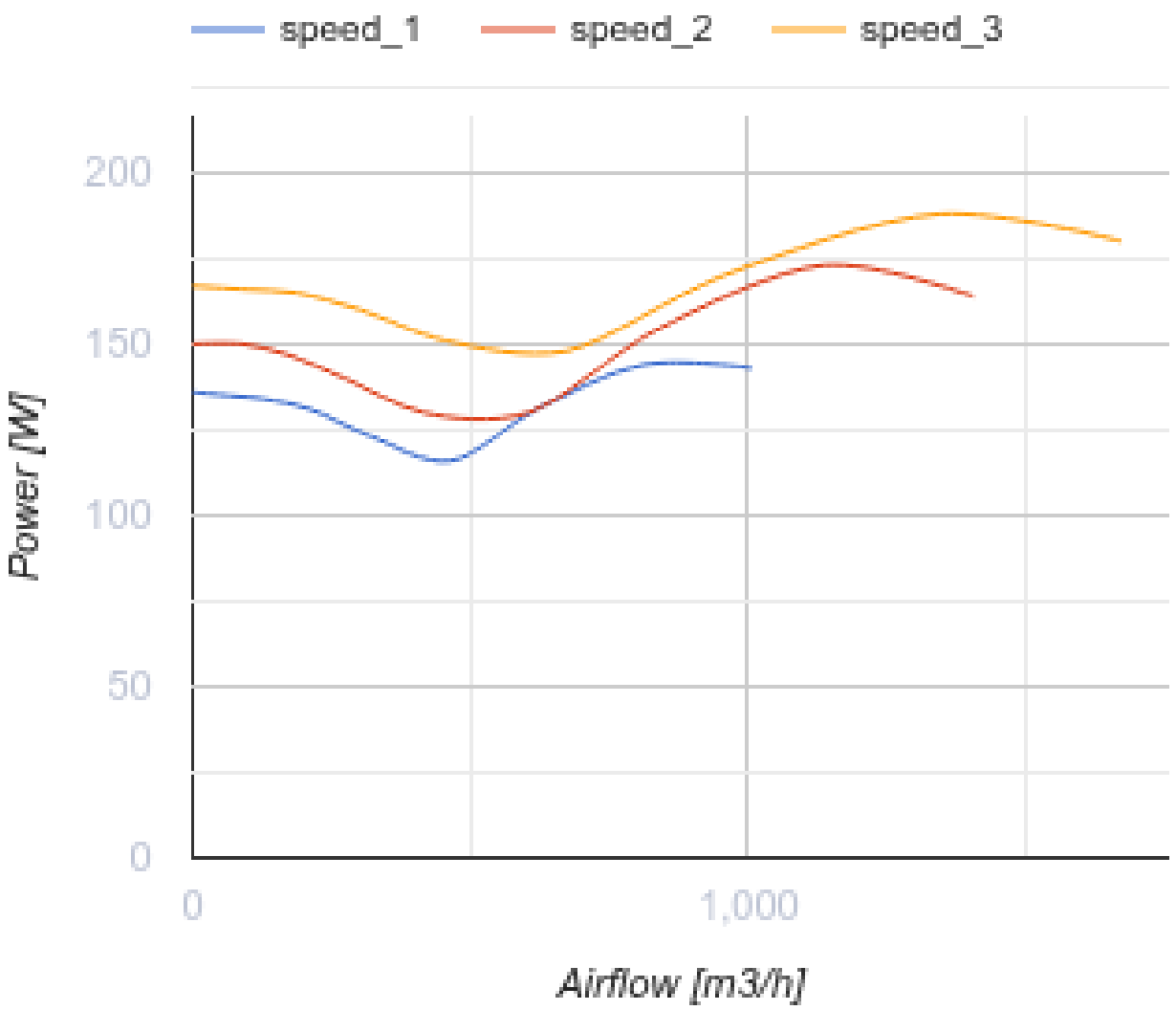

Dimensions

ØD	ØD1	L	L1	B
249	337	601	739	389

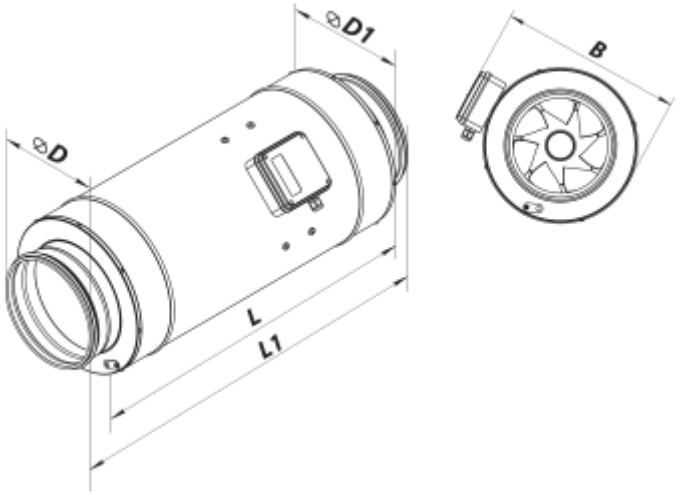

Accessories

For round ducts

Name	Photo	Description
SR 250/600		Silencers made of galvanized steel filled with non-combustible sound-absorbing material
SR 250/900		Silencers made of galvanized steel filled with non-combustible sound-absorbing material
SR 250/1200		Silencers made of galvanized steel filled with non-combustible sound-absorbing material
SRF 250/600		Silencers made of aluminium alloy filled with non-combustible sound-absorbing material
SRF 250/900		Silencers made of aluminium alloy filled with non-combustible sound-absorbing material
SRF 250/2000		Silencers made of aluminium alloy filled with non-combustible sound-absorbing material
SRP 250/500		Silencers with an internal flexible air duct made of micro-perforated aluminium foil laminated with polyester film
SRP 250/600		Silencers with an internal flexible air duct made of micro-perforated aluminium foil laminated with polyester film
SRP 250/750		Silencers with an internal flexible air duct made of micro-perforated aluminium foil laminated with polyester film

SRP 250/900		Silencers with an internal flexible air duct made of micro-perforated aluminium foil laminated with polyester film
SRP 250/1200		Silencers with an internal flexible air duct made of micro-perforated aluminium foil laminated with polyester film
SRP 250/1500		Silencers with an internal flexible air duct made of micro-perforated aluminium foil laminated with polyester film
SRP 250/2000		Silencers with an internal flexible air duct made of micro-perforated aluminium foil laminated with polyester film

For round ducts

Name	Photo	Description
FB 250		Round panel air filters
FBV 250		Round panel air filters with a large filtration area
FBK 250-4		Round bag air filters
FBK 250-5		Round bag air filters
FBK 250-7		Round bag air filters

For round ducts

Name	Photo	Description
KOM 250		Backdraught damper with spring-loaded plates for shutting off air flow in round air ducts
KOMu 250		Backdraught damper with spring-loaded plates for shutting off air flow in round air ducts
KOM1 250		Backdraught gravity damper for shutting off air flow in round air ducts
KR 250		Air dampers for controlling air flow in round air ducts

KRV 250		Air dampers for automatic air flow control in round ducts

For round ducts

Name	Photo	Description
VVG 250	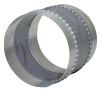	Flexible anti-vibration inserts for round ducts
VVGF 250		Flexible anti-vibration inserts with flanges for round air ducts

Water heaters

Name	Photo	Description
NKV 250-2		Inline water supply air heaters or heater for air handling units with a round cross-section
NKV 250-4		Inline water supply air heaters or heater for air handling units with a round cross-section

Electrical heaters

Name	Photo	Description
NK 250-1,2-1		Round electric inline heaters with round cross-section
NK 250-2,0-1		Round electric inline heaters with round cross-section
NK 250-2,4-1		Round electric inline heaters with round cross-section
NK 250-3,0-1		Round electric inline heaters with round cross-section
NK 250-3,6-3		Round electric inline heaters with round cross-section
NK 250-6,0-3		Round electric inline heaters with round cross-section

NK 250-9,0-3		Round electric inline heaters with round cross-section

Thyristor speed controllers

Name	Photo	Description
RS-1-400		Speed controller
RS-3,0-T		Applied in ventilation systems for speed switching ON/OFF and speed control of single-phase power-controlled motors
RS-5,0-T		Applied in ventilation systems for speed switching ON/OFF and speed control of single-phase power-controlled motors
RS-10,0-T		Applied in ventilation systems for speed switching ON/OFF and speed control of single-phase power-controlled motors

Speed controllers

Name	Photo	Description
RS-1,5-PS		Used in ventilation systems for switching on/off and speed control of single-phase fan motors with voltage control
RS-2,5-PS		Used in ventilation systems for switching on/off and speed control of single-phase fan motors with voltage control
RS-4,0-PS		Used in ventilation systems for switching on/off and speed control of single-phase fan motors with voltage control

Speed control switches

Name	Photo	Description
P3-1-300		Switch

Ecodesign

Trademark	Vents
Model	Boost-I 250 P
Type of drive installed	Integrated VSD
Type of heat recovery system	None
Nominal external pressure (Pa)	248
Maximum external leakage rates (%)	2.7
Static efficiency (%)	39.5
Declared typology	NRVU UVU
Effective electric power input (kW)	0.17
Sound power level (dB(A))	58