# Boost-I 250 EC Un



Mixed-flow inline fans in sound-insulated casings with EC-motors

- Sound pressure level LpA at 3 m: 48
- Sound-insulated casing
- Control: Speed controller
- Impeller type: Mixed-flow
- Casing material: Galvanized steel
- Installation in any position
- Temperature sensor: Remote

| | Unit of measurement | Boost-I 250 EC Un |
|---|---|---|
| Connected air duct size | mm | 250 |
| Phases | - | 1 |
| Minimum supply voltage | V | 230 |
| Maximum supply voltage | V | 230 |
| Power supply frequency | Hz | 50/60 |
| Rated power | W | 168 |
| Unit current | A | 1.34 |
| Maximum airflow | m³/h | 1750 |
| Rotation speed at 50hz | - | 3282 |
| Sound pressure level LpA at 3 m | dB(A) | 48 |
| Weight | kg | 9.8 |
| Transported air temperature (max) | °C | 55 |
| Transported air temperature (min) | °C | -25 |
| Ambient air temperature max | °C | 40 |
| Ambient air temperature min | °C | 1 |
| Ingress protection rating | - | IPX4 |
| Ingress protection rating of the drive | - | IP44 |
| Impeller material | - | Plastic |

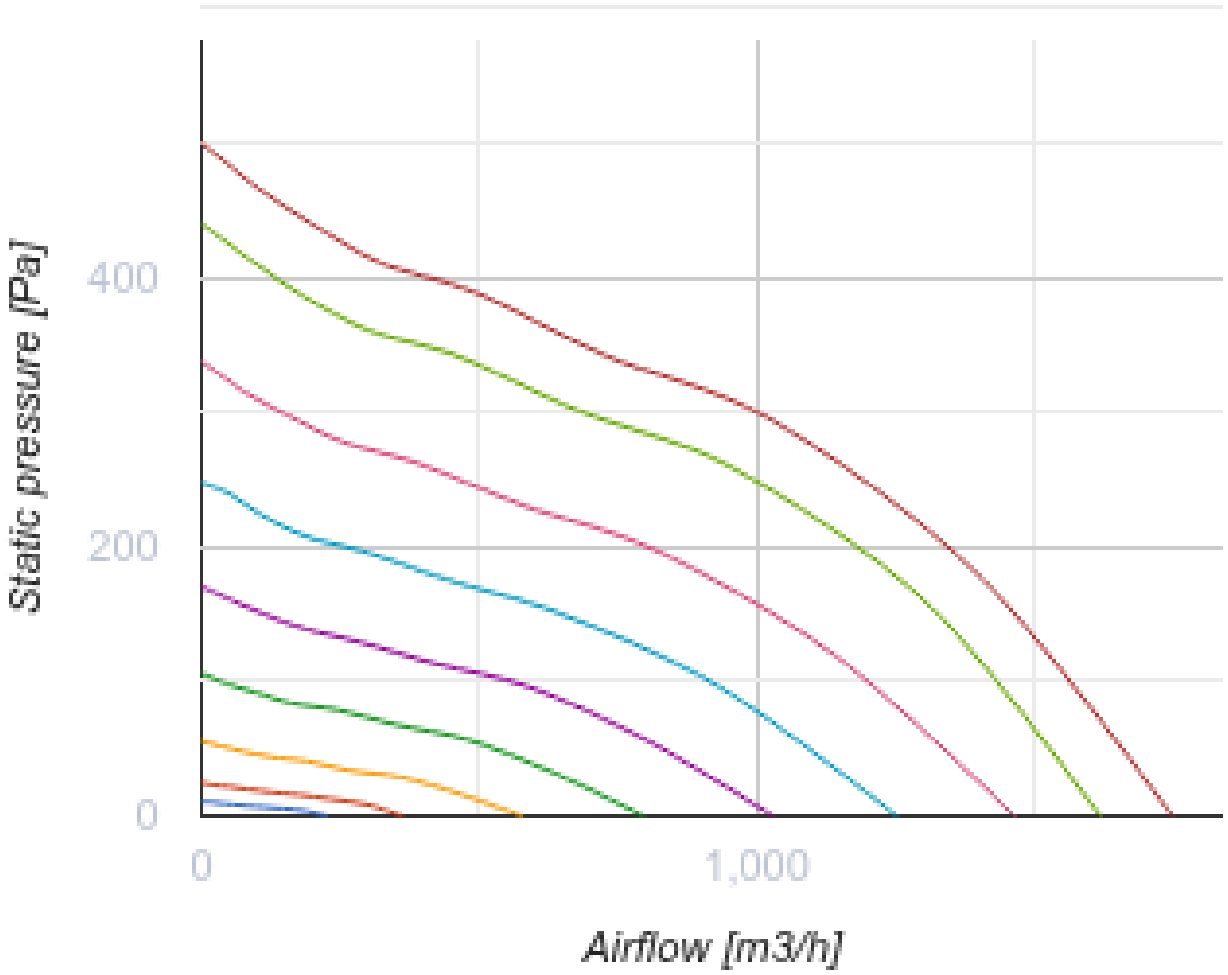
Static pressure [Pa]
400
200
0
0
1,000
Airflow [m3/h]

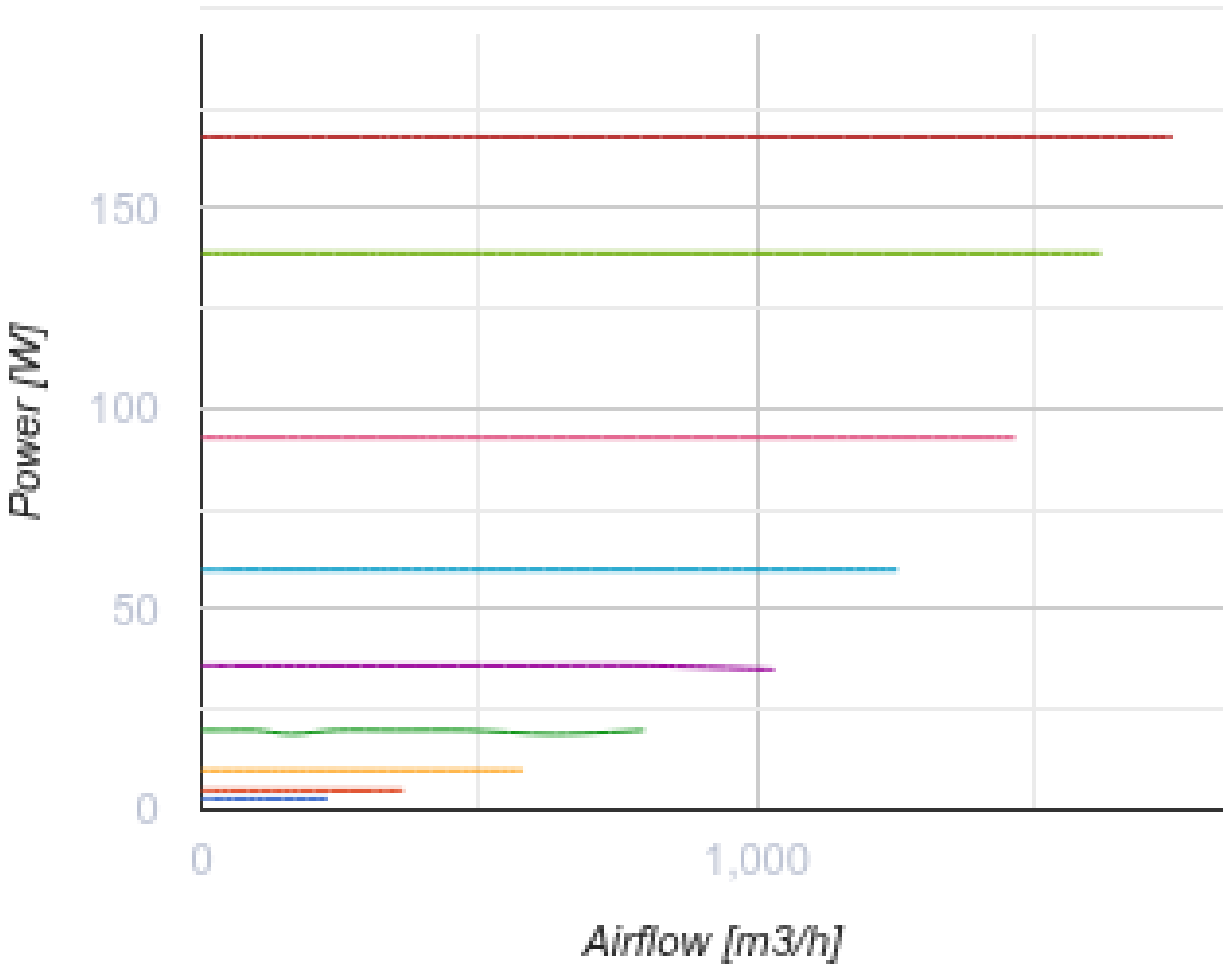


## Dimensions

| Ø D | Ø D1 | B | L | L1 |
|---|---|---|---|---|
| 249 | 337 | 389 | 601 | 739 |

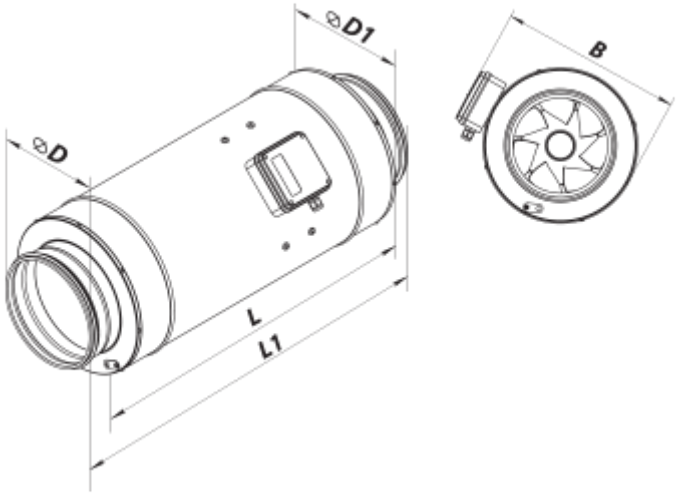


## Accessories

### For round ducts

| Name | Photo | Description |
|---|---|---|
| SR 250/600 |  | Silencers made of galvanized steel filled with non-combustible sound-absorbing material |
| SR 250/900 |  | Silencers made of galvanized steel filled with non-combustible sound-absorbing material |
| SR 250/1200 |  | Silencers made of galvanized steel filled with non-combustible sound-absorbing material |
| SRP 250/500 |  | Silencers with an internal flexible air duct made of micro-perforated aluminium foil laminated with polyester film |
| SRP 250/600 |  | Silencers with an internal flexible air duct made of micro-perforated aluminium foil laminated with polyester film |
| SRP 250/750 |  | Silencers with an internal flexible air duct made of micro-perforated aluminium foil laminated with polyester film |
| SRP 250/900 |  | Silencers with an internal flexible air duct made of micro-perforated aluminium foil laminated with polyester film |
| SRP 250/1200 |  | Silencers with an internal flexible air duct made of micro-perforated aluminium foil laminated with polyester film |
| SRP 250/1500 |  | Silencers with an internal flexible air duct made of micro-perforated aluminium foil laminated with polyester film |

| | | |
|---|---|---|
| SRP 250/2000 |  | Silencers with an internal flexible air duct made of micro-perforated aluminium foil laminated with polyester film |

### For round ducts

| Name | Photo | Description |
|---|---|---|
| FB 250 |  | Round panel air filters |
| FBV 250 |  | Round panel air filters with a large filtration area |
| FBK 250-4 |  | Round bag air filters |
| FBK 250-5 | 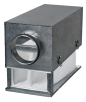 | Round bag air filters |
| FBK 250-7 | 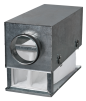 | Round bag air filters |

### For round ducts

| Name | Photo | Description |
|---|---|---|
| KOM 250 |  | Backdraught damper with spring-loaded plates for shutting off air flow in round air ducts |
| KOMu 250 |  | Backdraught damper with spring-loaded plates for shutting off air flow in round air ducts |
| KOM1 250 |  | Backdraught gravity damper for shutting off air flow in round air ducts |
| KR 250 |  | Air dampers for controlling air flow in round air ducts |
| KRV 250 |  | Air dampers for automatic air flow control in round ducts |

### For round ducts

| Name | Photo | Description |
|---|---|---|
| VVG 250 | 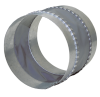 | Flexible anti-vibration inserts for round ducts |

| | | |
|---|---|---|
| VVGF 250 |  | Flexible anti-vibration inserts with flanges for round air ducts |

### Water heaters

| Name | Photo | Description |
|---|---|---|
| NKV 250-2 |  | Inline water supply air heaters or heater for air handling units with a round cross-section |
| NKV 250-4 |  | Inline water supply air heaters or heater for air handling units with a round cross-section |

### Electrical heaters

| Name | Photo | Description |
|---|---|---|
| NK 250-1,2-1 |  | Round electric inline heaters with round cross-section |
| NK 250-2,0-1 |  | Round electric inline heaters with round cross-section |
| NK 250-2,4-1 |  | Round electric inline heaters with round cross-section |
| NK 250-3,0-1 |  | Round electric inline heaters with round cross-section |
| NK 250-3,6-3 |  | Round electric inline heaters with round cross-section |
| NK 250-6,0-3 |  | Round electric inline heaters with round cross-section |
| NK 250-9,0-3 |  | Round electric inline heaters with round cross-section |

### Speed controllers

| Name | Photo | Description |
|---|---|---|
| R-1/010 |  | Speed controller for EC motors |