Boost-I 250 EC P



Mixed-flow inline fans in sound-insulated casings with EC-motors

- Sound pressure level LpA at 3 m: 48
- Sound-insulated casing
- Control: Built-in speed controller
- Impeller type: Mixed-flow
- Casing material: Galvanized steel
- Installation in any position

	Unit of measurement	Boost-I 250 EC P
Connected air duct size	mm	250
Phases	-	1
Minimum supply voltage	V	230
Maximum supply voltage	V	230
Power supply frequency	Hz	50/60
Rated power	W	168
Unit current	A	1.34
Maximum airflow	m^3/h	1750
Rotation speed at 50hz	-	3282
Sound pressure level LpA at 3 m	dB(A)	48
Weight	kg	9.8
Transported air temperature (max)	°C	55
Transported air temperature (min)	°C	-25
Ambient air temperature max	°C	40
Ambient air temperature min	°C	1
Ingress protection rating	-	IPX4
Ingress protection rating of the drive	-	IP44
Impeller material	-	Plastic

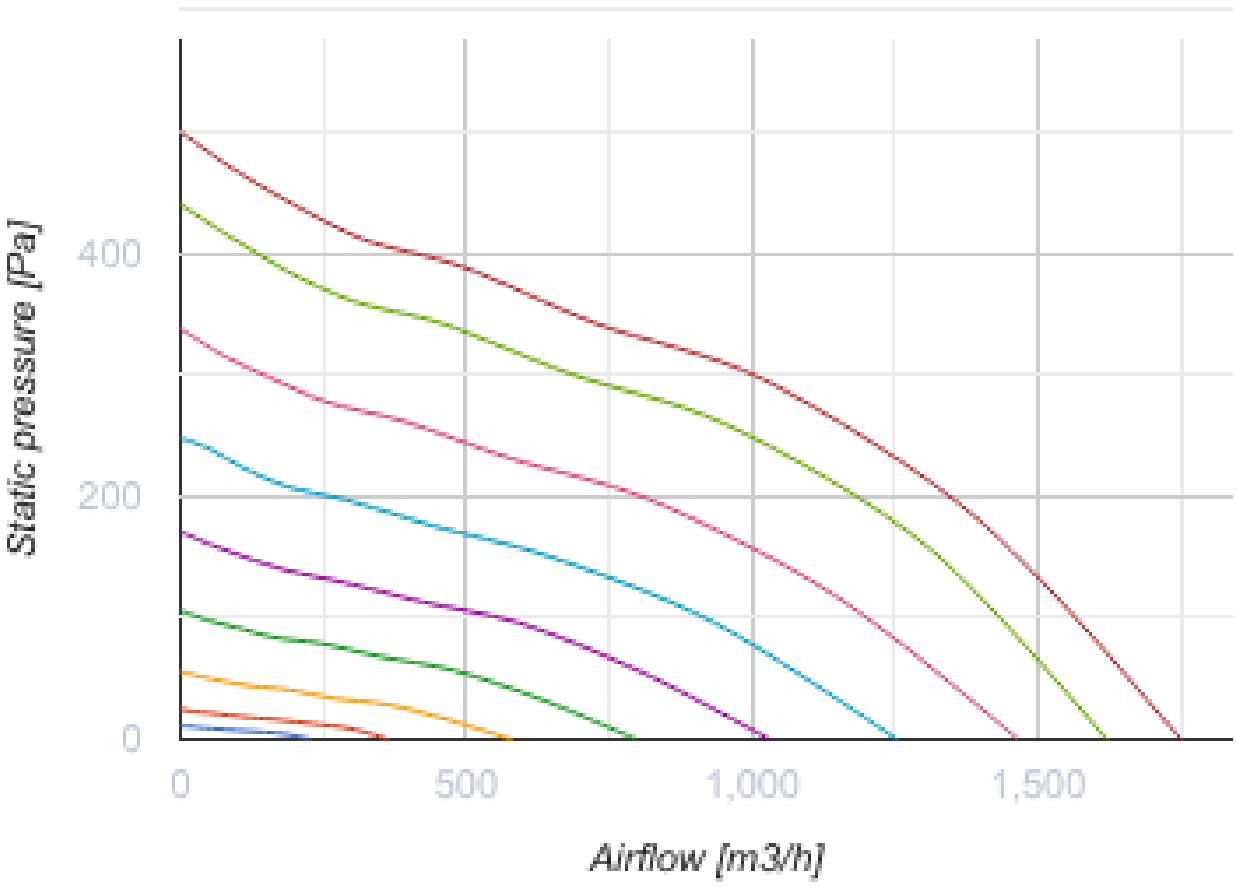
Static pressure [Pa]
400
200
0
0
500
1,000
1,500
Airflow [m3/h]

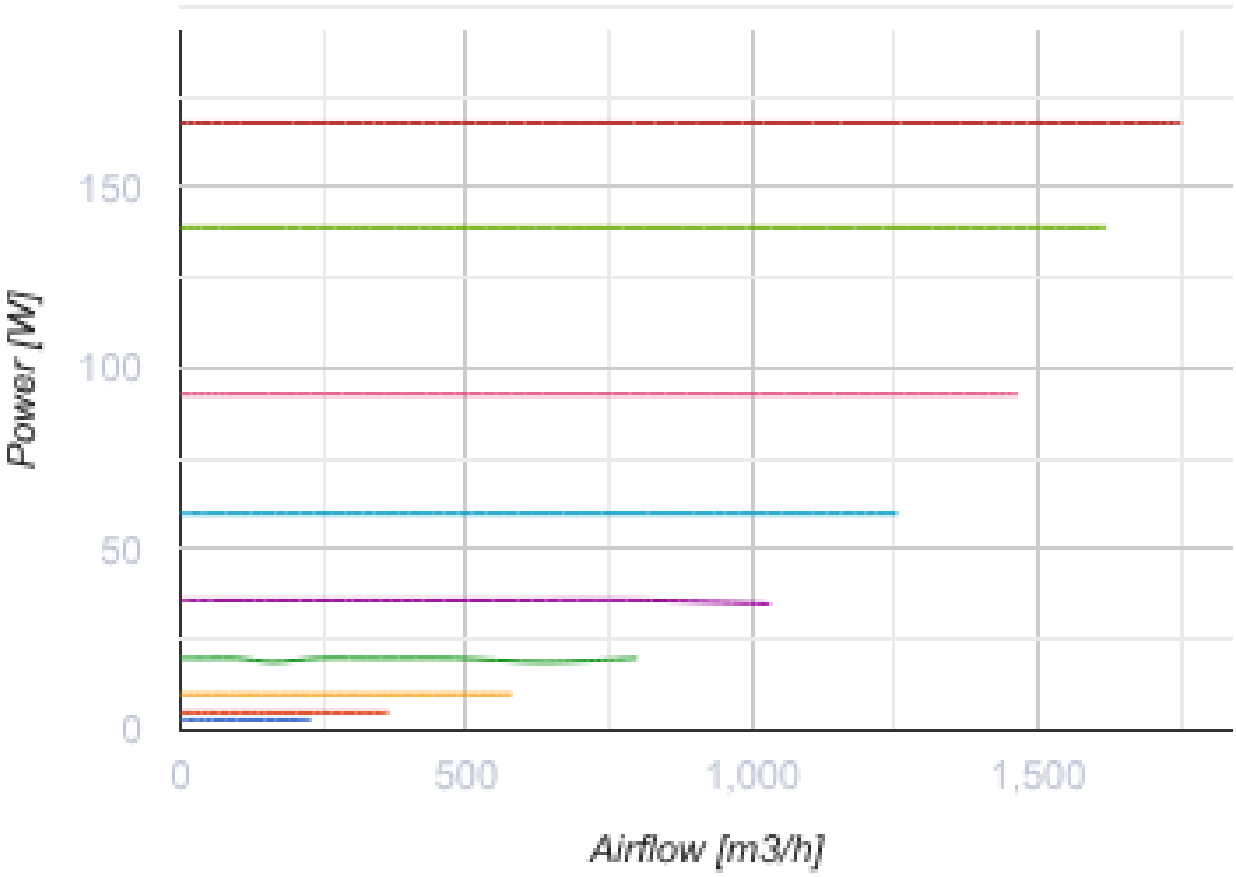

Dimensions

ØD	ØD1	L	L1	B
249	337	601	739	389

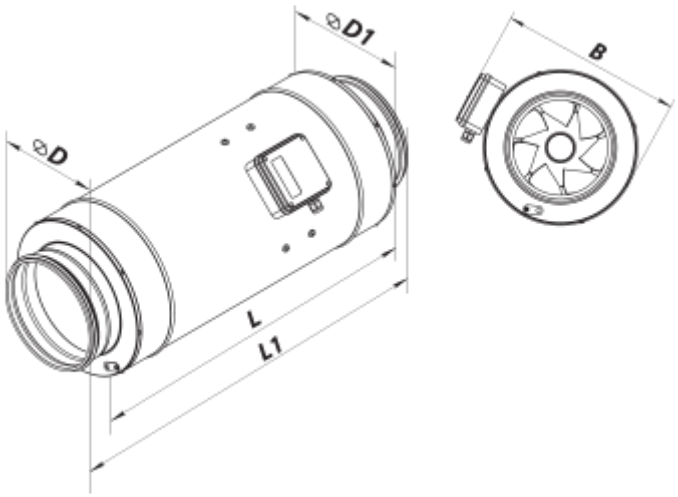

Accessories

For round ducts

Name	Photo	Description
SR 250/600		Silencers made of galvanized steel filled with non-combustible sound-absorbing material
SR 250/900		Silencers made of galvanized steel filled with non-combustible sound-absorbing material
SR 250/1200		Silencers made of galvanized steel filled with non-combustible sound-absorbing material
SRP 250/500		Silencers with an internal flexible air duct made of micro-perforated aluminium foil laminated with polyester film
SRP 250/600		Silencers with an internal flexible air duct made of micro-perforated aluminium foil laminated with polyester film
SRP 250/750		Silencers with an internal flexible air duct made of micro-perforated aluminium foil laminated with polyester film
SRP 250/900		Silencers with an internal flexible air duct made of micro-perforated aluminium foil laminated with polyester film
SRP 250/1200		Silencers with an internal flexible air duct made of micro-perforated aluminium foil laminated with polyester film
SRP 250/1500		Silencers with an internal flexible air duct made of micro-perforated aluminium foil laminated with polyester film
SRP 250/2000		Silencers with an internal flexible air duct made of micro-perforated aluminium foil laminated with polyester film

For round ducts

Name	Photo	Description
FB 250		Round panel air filters
FBV 250		Round panel air filters with a large filtration area

FBK 250-4		Round bag air filters
FBK 250-5		Round bag air filters
FBK 250-7	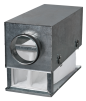	Round bag air filters

For round ducts

Name	Photo	Description
KOM 250		Backdraught damper with spring-loaded plates for shutting off air flow in round air ducts
KOMu 250		Backdraught damper with spring-loaded plates for shutting off air flow in round air ducts
KOM1 250		Backdraught gravity damper for shutting off air flow in round air ducts
KR 250		Air dampers for controlling air flow in round air ducts
KRV 250		Air dampers for automatic air flow control in round ducts

For round ducts

Name	Photo	Description
VVG 250	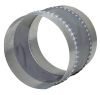	Flexible anti-vibration inserts for round ducts
VVGF 250		Flexible anti-vibration inserts with flanges for round air ducts

Water heaters

Name	Photo	Description
NKV 250-2		Inline water supply air heaters or heater for air handling units with a round cross-section

NKV 250-4		Inline water supply air heaters or heater for air handling units with a round cross-section

Electrical heaters

Name	Photo	Description
NK 250-1,2-1		Round electric inline heaters with round cross-section
NK 250-2,0-1		Round electric inline heaters with round cross-section
NK 250-2,4-1		Round electric inline heaters with round cross-section
NK 250-3,0-1		Round electric inline heaters with round cross-section
NK 250-3,6-3		Round electric inline heaters with round cross-section
NK 250-6,0-3		Round electric inline heaters with round cross-section
NK 250-9,0-3		Round electric inline heaters with round cross-section

Speed controllers

Name	Photo	Description
R-1/010		Speed controller for EC motors