Boost 150



Mixed-flow inline fans

- Sound pressure level LpA at 3 m: 37
- Impeller type: Mixed-flow
- Casing material: Polypropylene
- Installation in any position

	Unit of measurement	Boost 150		
Speed	-	1	2	3
Connected air duct size	mm	150		
Phases	-	1		
Minimum supply voltage	V	230		
Maximum supply voltage	V	230		
Power supply frequency	Hz	50		
Rated power	W	34	37	45
Unit current	A	0.15	0.16	0.20
Maximum airflow	m^3/h	488	544	600
Rotation speed at 50hz	-	2550	2704	2816
Sound pressure level LpA at 3 m	dB(A)	34	35	37
Weight	kg	2.8		
Transported air temperature (max)	°C	55		
Transported air temperature (min)	°C	-25		
Ingress protection rating	-	IPX4		
Ingress protection rating of the drive	-	IP20		
Impeller material	-	Plastic		

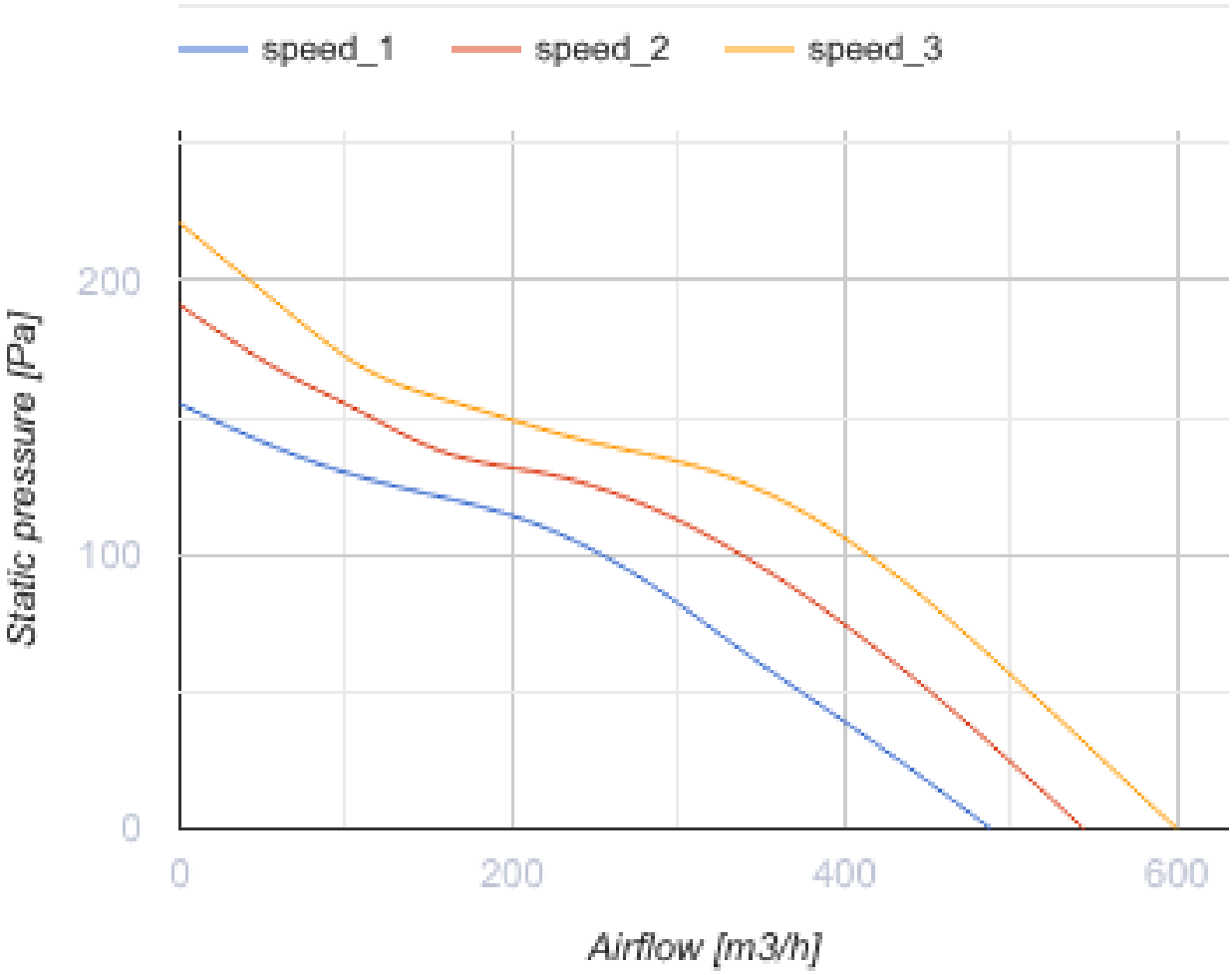
speed_1
speed_2
speed_3
Static pressure [Pa]
200
100
0
0
200
400
600
Airflow [m3/h]

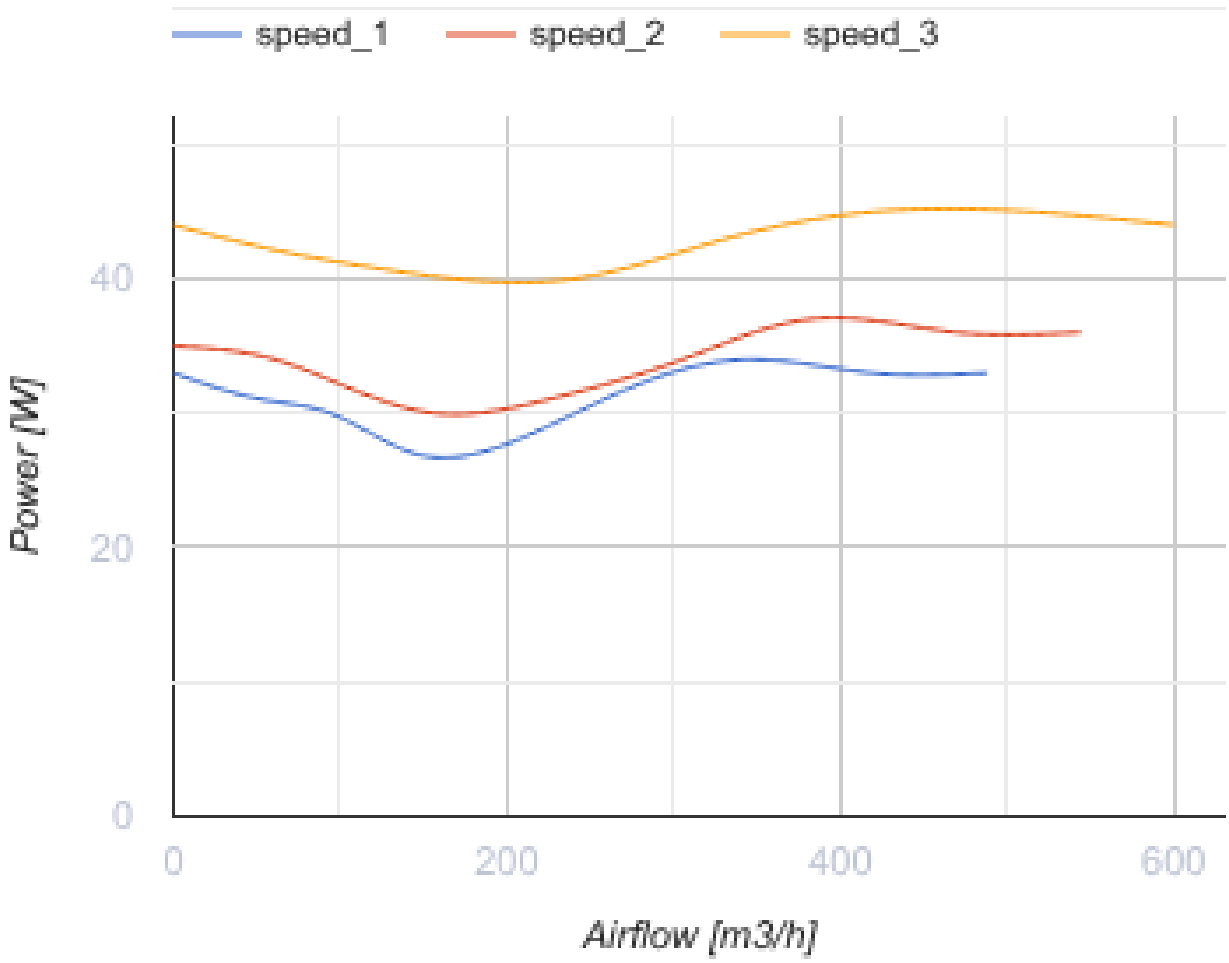

Dimensions

A	B	C	D
267	301	247	150

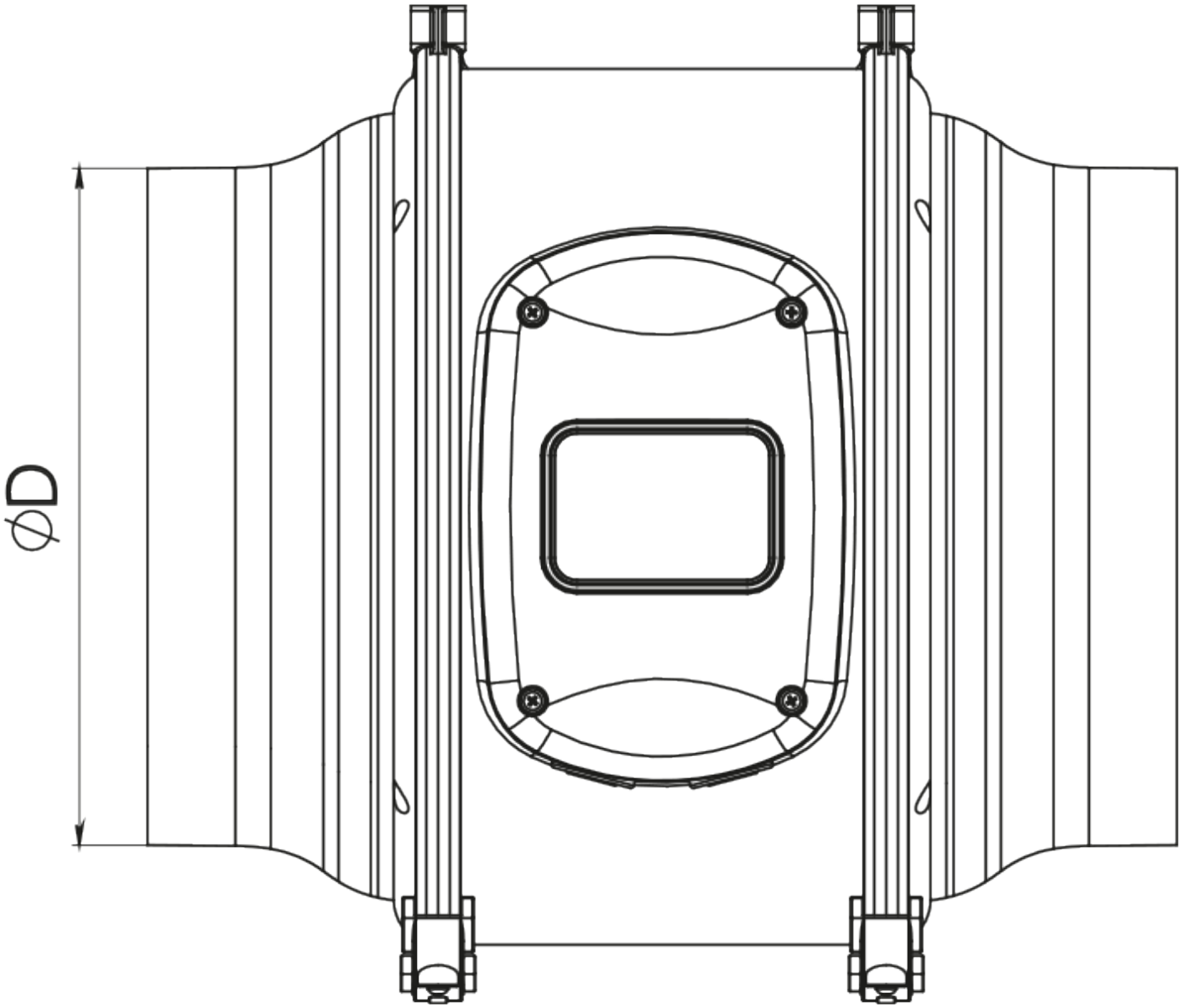
ØD

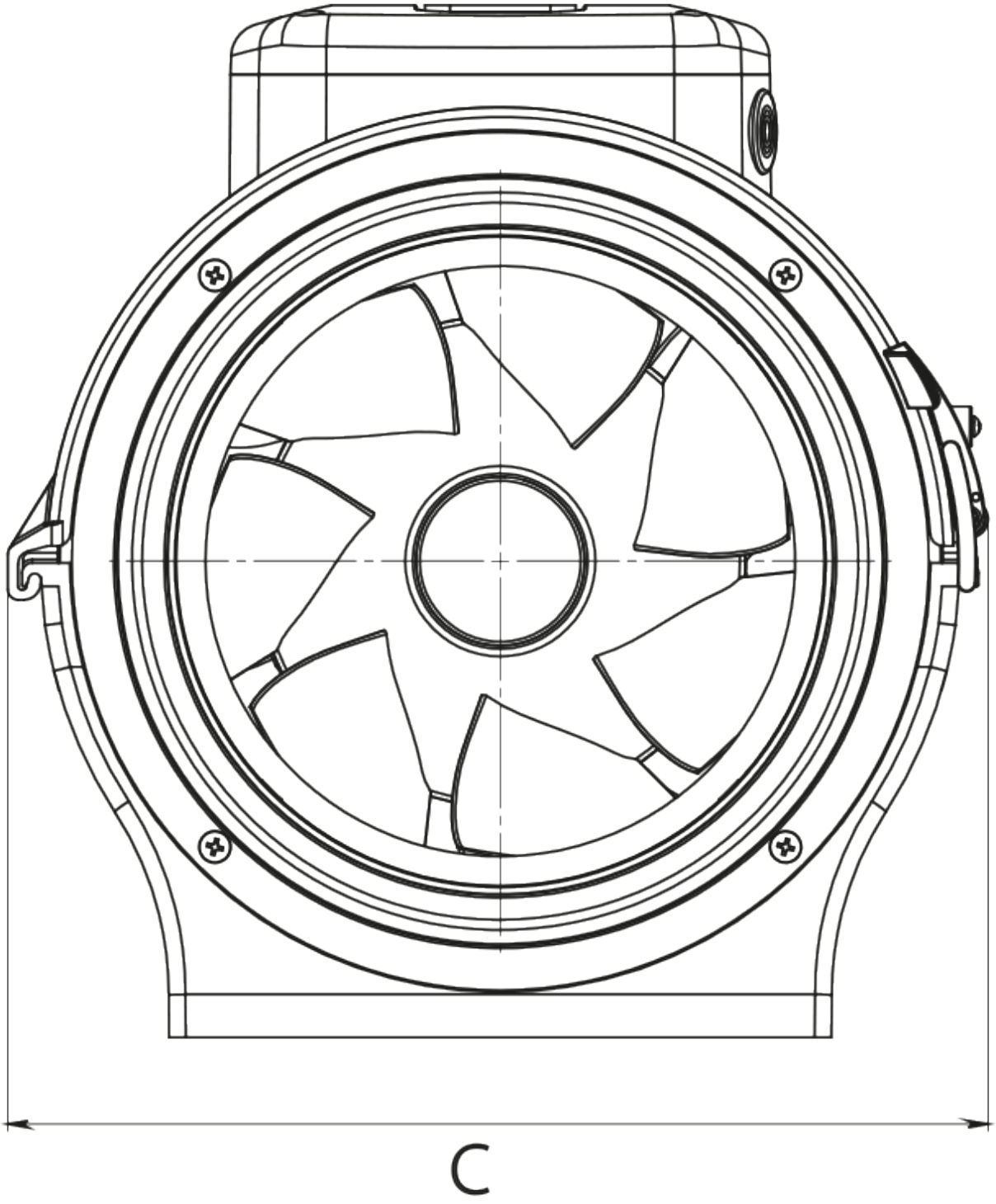
C

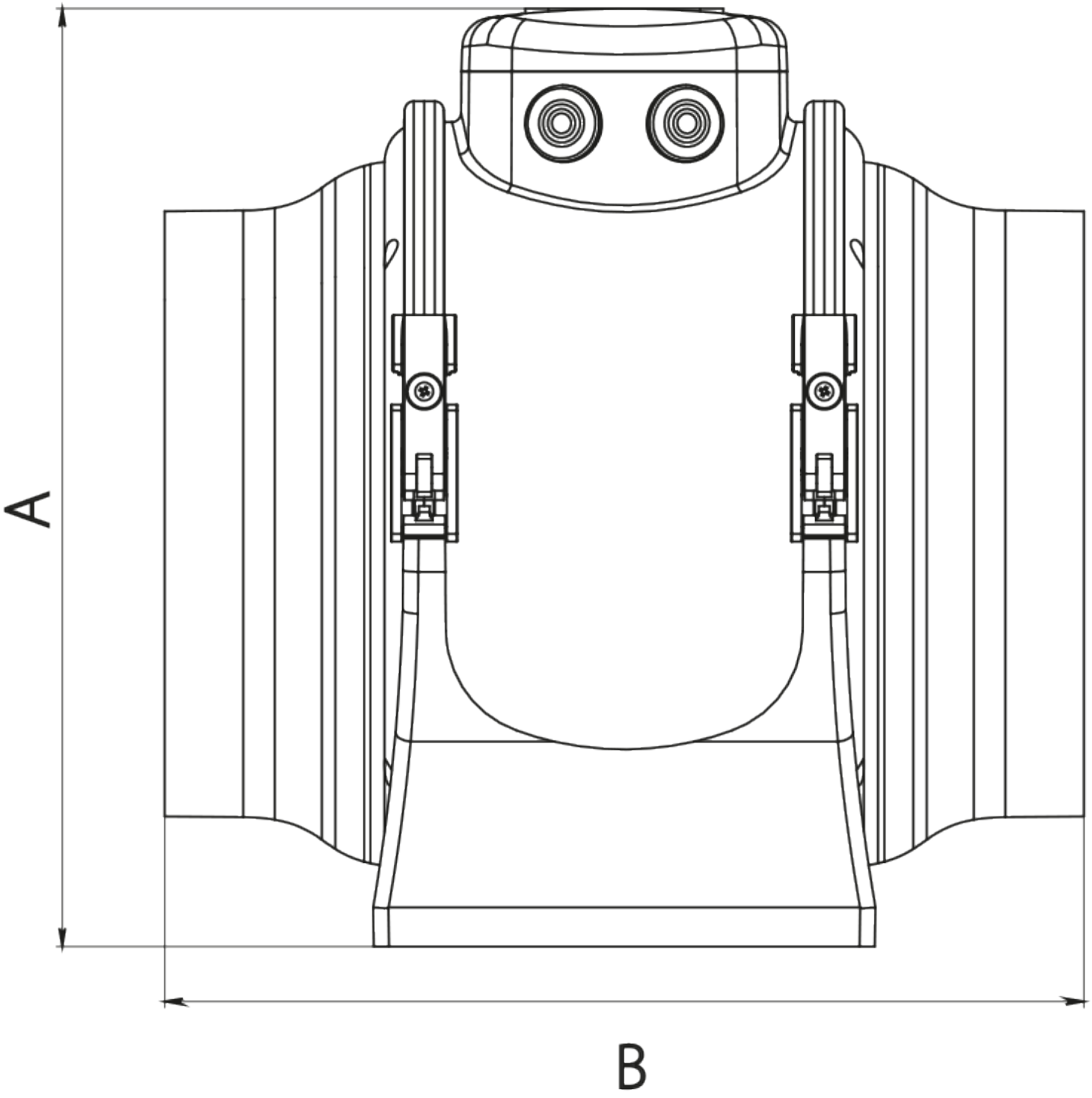

Accessories

For round ducts

Name	Photo	Description

SR 150/600		Silencers made of galvanized steel filled with non-combustible sound-absorbing material
SR 150/900		Silencers made of galvanized steel filled with non-combustible sound-absorbing material
SR 150/1200		Silencers made of galvanized steel filled with non-combustible sound-absorbing material
SRP 125/500		Silencers with an internal flexible air duct made of micro-perforated aluminium foil laminated with polyester film
SRP 125/600		Silencers with an internal flexible air duct made of micro-perforated aluminium foil laminated with polyester film
SRP 125/750		Silencers with an internal flexible air duct made of micro-perforated aluminium foil laminated with polyester film
SRP 125/900		Silencers with an internal flexible air duct made of micro-perforated aluminium foil laminated with polyester film
SRP 125/1200		Silencers with an internal flexible air duct made of micro-perforated aluminium foil laminated with polyester film
SRP 125/1500		Silencers with an internal flexible air duct made of micro-perforated aluminium foil laminated with polyester film
SRP 125/2000		Silencers with an internal flexible air duct made of micro-perforated aluminium foil laminated with polyester film

For round ducts

Name	Photo	Description
FB K2 150 G4/F8		Panel filters of a high purification level
FB K2 150 G4/C/F8		Panel filters of a high purification level
FB K2 150 G4/H13		Panel filters of a high purification level
FB K2 150 G4/C/H13		Panel filters of a high purification level

FB K2 150 ES		Panel electrostatic filters of a high purification level
FB K2 150 G4/F8 UV	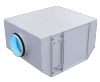	Filter boxes with a high purification level and air disinfection
FB K2 150 G4/C/F8 UV	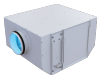	Filter boxes with a high purification level and air disinfection
FB K2 150 G4/H13 UV	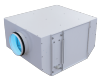	Filter boxes with a high purification level and air disinfection
FB K2 150 G4/C/H13 UV	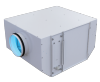	Filter boxes with a high purification level and air disinfection
FB K2 150 UV	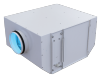	Filter boxes with a high purification level and air disinfection
FB 150		Round panel air filters
FBV 150		Round panel air filters with a large filtration area
FBK 150-4		Round bag air filters
FBK 150-5		Round bag air filters
FBK 150-7	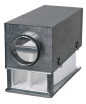	Round bag air filters

For round ducts

Name	Photo	Description
KOM 150		Backdraught damper with spring-loaded plates for shutting off air flow in round air ducts
KOMu 150		Backdraught damper with spring-loaded plates for shutting off air flow in round air ducts
KOM1 150		Backdraught gravity damper for shutting off air flow in round air ducts

KR 150		Air dampers for controlling air flow in round air ducts

For round ducts

Name	Photo	Description
VVG 150	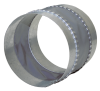	Flexible anti-vibration inserts for round ducts

Water heaters

Name	Photo	Description
NKV 150-2		Inline water supply air heaters or heater for air handling units with a round cross-section
NKV 150-4		Inline water supply air heaters or heater for air handling units with a round cross-section

Electrical heaters

Name	Photo	Description
NK 150-1,2-1		Round electric inline heaters with round cross-section
NK 150-1,7-1		Round electric inline heaters with round cross-section
NK 150-2,0-1		Round electric inline heaters with round cross-section
NK 150-2,4-1		Round electric inline heaters with round cross-section
NK 150-3,4-1		Round electric inline heaters with round cross-section
NK 150-3,6-3		Round electric inline heaters with round cross-section
NK 150-5,1-3		Round electric inline heaters with round cross-section

NK 150-6,0-3		Round electric inline heaters with round cross-section

Thyristor speed controllers

Name	Photo	Description
RS-1-400		Speed controller
RS-3,0-T		Applied in ventilation systems for speed switching ON/OFF and speed control of single-phase power-controlled motors
RS-5,0-T		Applied in ventilation systems for speed switching ON/OFF and speed control of single-phase power-controlled motors
RS-10,0-T		Applied in ventilation systems for speed switching ON/OFF and speed control of single-phase power-controlled motors

Speed controllers

Name	Photo	Description
RS-0,5-PS		Used in ventilation systems for switching on/off and speed control of single-phase fan motors with voltage control
RS-1,5-PS		Used in ventilation systems for switching on/off and speed control of single-phase fan motors with voltage control
RS-2,5-PS		Used in ventilation systems for switching on/off and speed control of single-phase fan motors with voltage control
RS-4,0-PS		Used in ventilation systems for switching on/off and speed control of single-phase fan motors with voltage control

Speed control switches

Name	Photo	Description
P3-1-300		Switch

Ecodesign

Trademark	Vents
Model	Boost 150
Type of drive installed	Integrated VSD
Type of heat recovery system	None
Nominal external pressure (Pa)	128
Maximum external leakage rates (%)	2.7
Static efficiency (%)	28
Declared typology	NRVU UVU
Effective electric power input (kW)	0.043
Sound power level (dB(A))	56