Belimo CM24

The actuators are designed for controlling air dampers with cross section up to 0.4 m²



	Unit of measurement	Belimo CM24
Phases	-	1
Minimum supply voltage	V	24
Maximum supply voltage	V	24
Power supply frequency	Hz	50/60
Rated power	W	0.5
Weight	kg	0.13
Ambient air temperature min	°C	-30
Ambient air temperature max	°C	50
Ingress protection rating	-	IP54

Dimensions

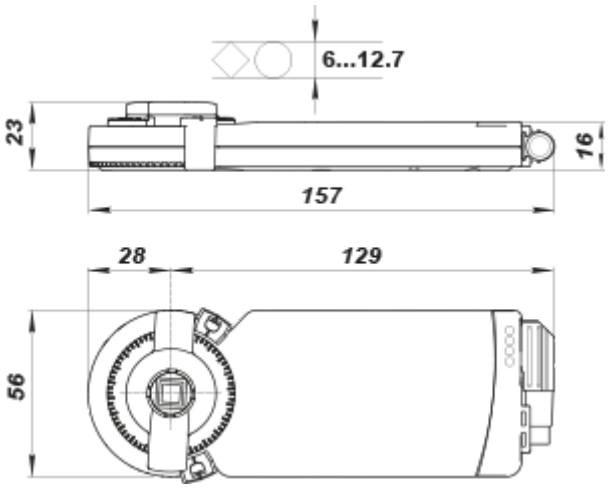
6...12.7
23
16
157
28
129
56