Av DVP/DVK 695x695/250

For connection of the square ceiling diffusers DVP and DVK to round air ducts

- Casing material: Galvanized steel

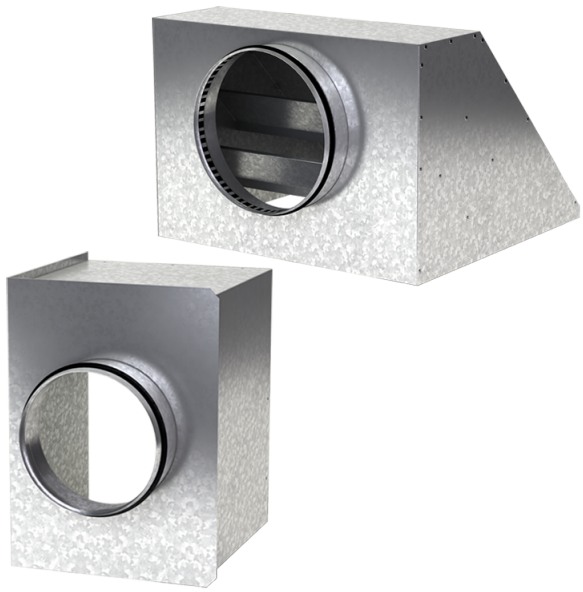

	Unit of measurement	Av DVP/DVK 695x695/250
Connected air duct size	mm	250
Weight	kg	5.64

Dimensions

a	b	ØD	K
692.6	692.6	250	305.5

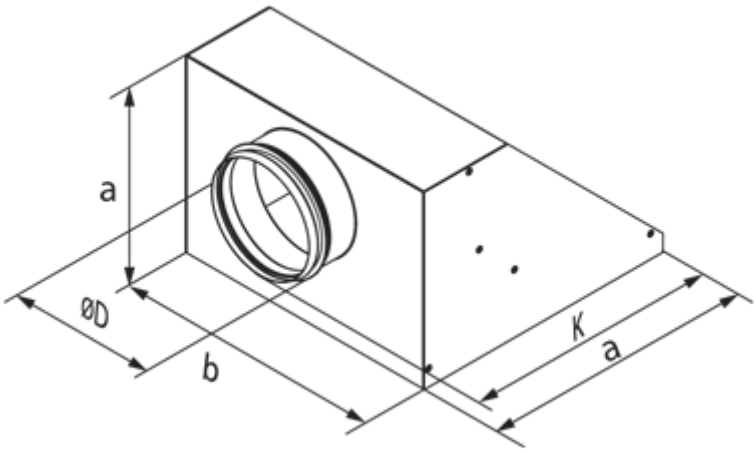
a
ØD
b
K
a