Av DVP/DVK 395x395/200

For connection of the square ceiling diffusers DVP and DVK to round air ducts

• Casing material: Galvanized steel

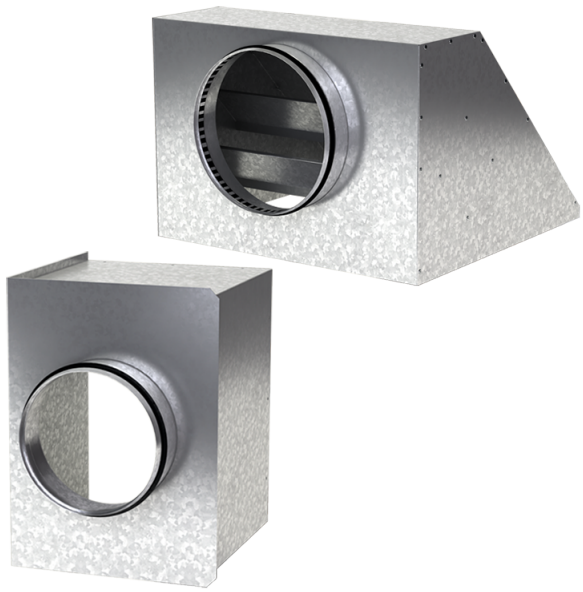

	Unit of measurement	Av DVP/DVK 395x395/200
Connected air duct size	mm	200
Weight	kg	2.69

Dimensions

a	b	ØD	K
392.6	392.6	200	305.5

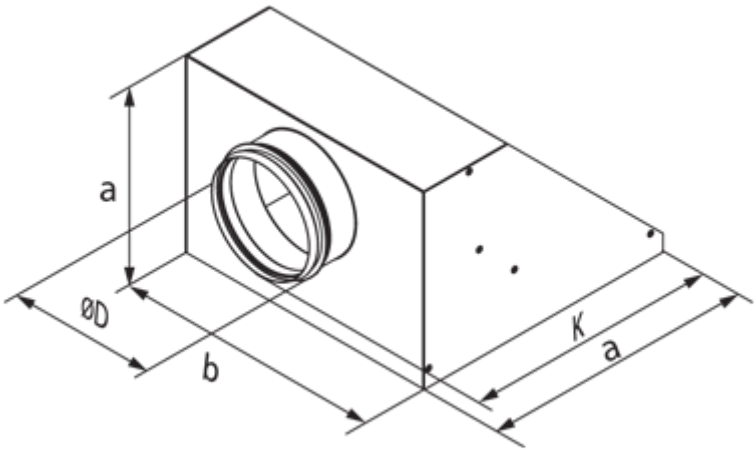
a
ØD
b
K
a