# Av DVP/DVK 395x395/160

For connection of the square ceiling diffusers DVP and DVK to round air ducts

• Casing material: Galvanized steel

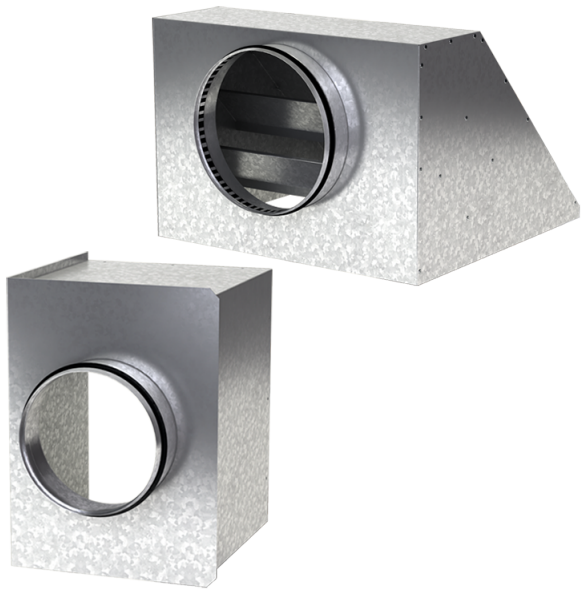

| | Unit of measurement | Av DVP/DVK 395x395/160 |
|---|---|---|
| Connected air duct size | mm | 160 |
| Weight | kg | 2.69 |

## Dimensions

| a | b | ØD | K |
|---|---|---|---|
| 392.6 | 392.6 | 160 | 305.5 |

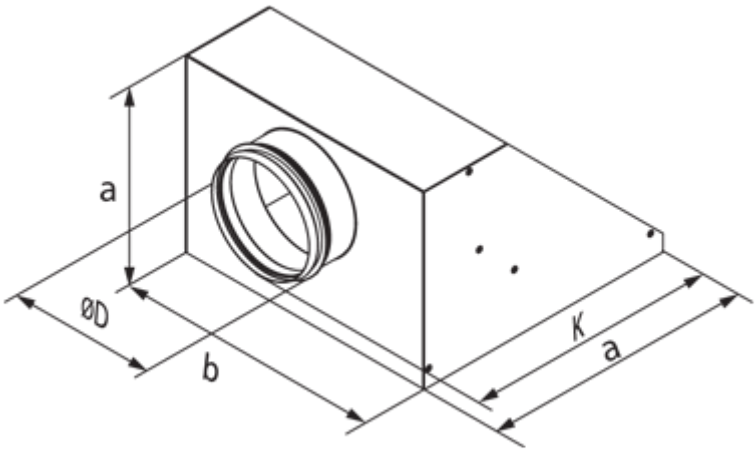
a
ØD
b
K
a