Arc Smart white

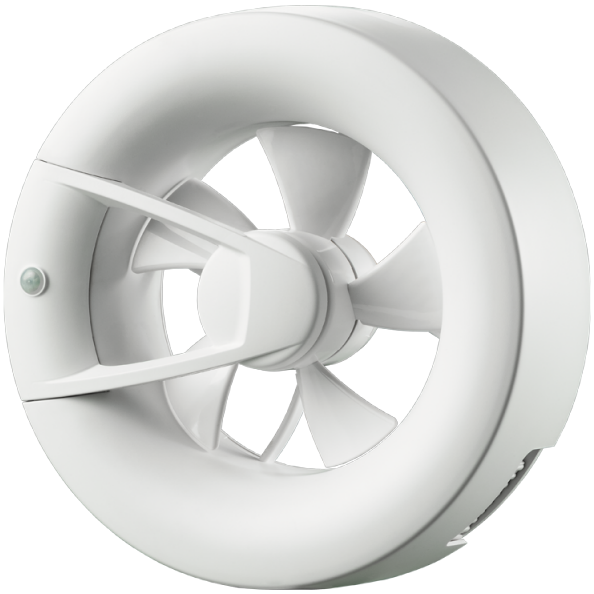

Axial extract fans with intelligent control and built-in Wi-Fi

- Sound pressure level LpA at 3 m: 28
- Lighting
- Control: Smartphone
- Impeller type: Axial
- Short spigot
- Motion sensor
- Humidity sensor
- Temperature sensor
- Timer: Turn off timer, Turn on timer
- Ball bearing

	Unit of measurement	Arc Smart white					
Speed	-	1	2	3	4	5	6
Connected air duct size	mm	100/125					
Minimum supply voltage	V	100					
Maximum supply voltage	V	240					
Power supply frequency	Hz	50/60					
Rated power	W	0.4	0.6	0.8	1.6	2.7	2.9
Unit current	A	0.018	0.019	0.021	0.029	0.038	0.04
Maximum airflow	m^3/h	20	40	60	90	115	140
Sound pressure level LpA at 3 m	dB(A)	9	13	18	22	27	28
Ingress protection rating	-	IP44					

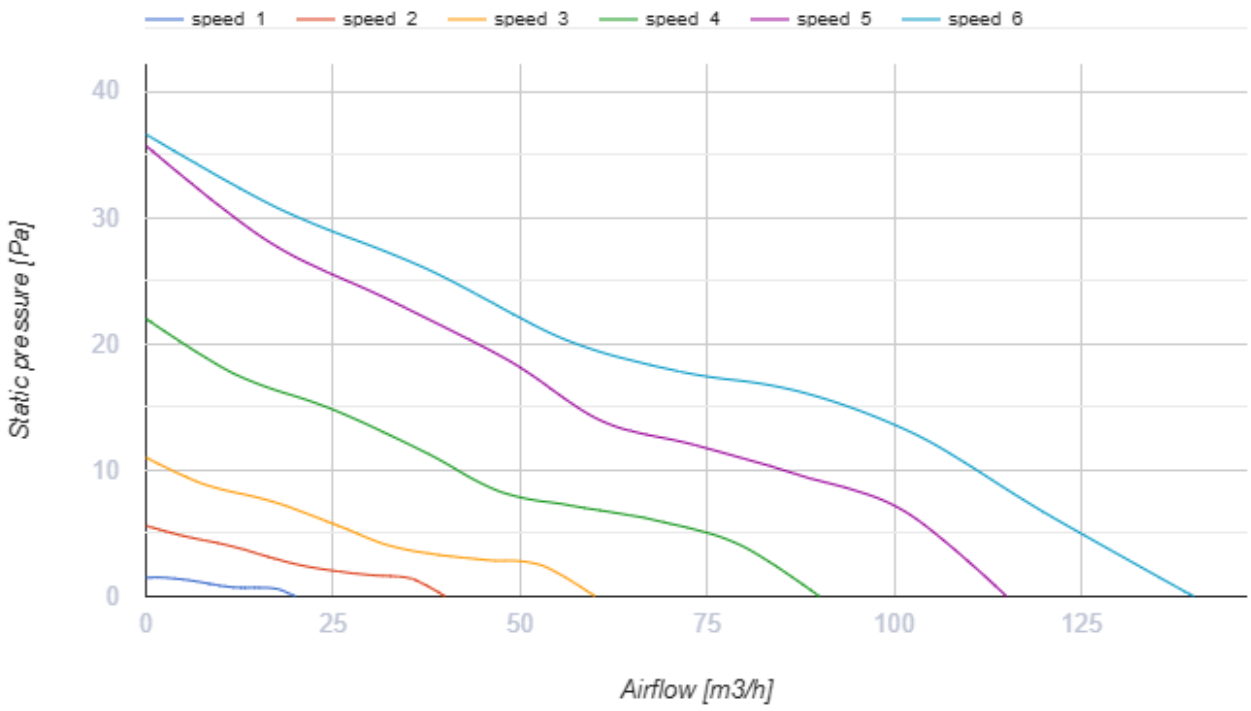

Dimensions

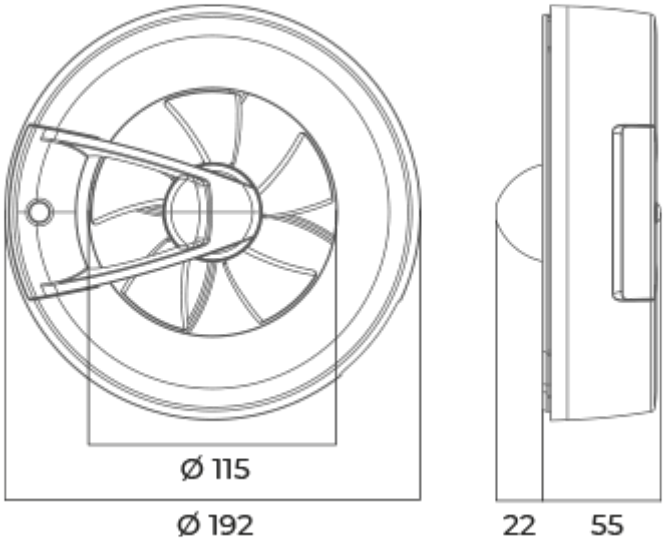

Accessories

Plastic

Name	Photo	Description
MV 100 V		Two-piece plastic grilles with angled louvers

MV 120 V		Two-piece plastic grilles with angled louvers

Fittings

Name	Photo	Description
PVT 050/10		The adhesive PVC tape is an insulation tape made of plasticized PVC base covered with a glue layer
PVT 050/30		The adhesive PVC tape is an insulation tape made of plasticized PVC base covered with a glue layer
PVT 050/50		The adhesive PVC tape is an insulation tape made of plasticized PVC base covered with a glue layer
C 100		The clamps are designed for quick and reliable mounting and connection of various round ventilation system components. Clamps are made of stainless steel band
C 125		The clamps are designed for quick and reliable mounting and connection of various round ventilation system components. Clamps are made of stainless steel band

Flat duct

Name	Photo	Description
1805		Wall mounting
2805		Wall mounting

Flexible ducts

Name	Photo	Description
Polyvent N		Flexible uninsulated air duct made of metallized film

Backdraft dampers

Name	Photo	Description
KO 100		Back valve is designed for domestic fan
KO 125		Back valve is designed for domestic fan

KO1 100		Back valve is designed for domestic fan

Window vents

Name	Photo	Description
PO 400		Window ventilators for supply ventilation

Plastic

Name	Photo	Description
MV 102 VK		Supply and exhaust hoods

Metal

Name	Photo	Description
MVM 102 V N		Exhaust metal hoods