AOW 30



Air unit with the water heat exchanger for arrangement of cost-saving and efficient air heating and cooling in various premises

- Sound pressure level LpA at 3 m: 55
- Casing material: Coated steel

	Unit of measurement	AOW 30
Phases	-	1
Minimum supply voltage	V	230
Maximum supply voltage	V	230
Power supply frequency	Hz	50
Rated power	W	191
Unit current	A	0.85
Maximum airflow	m^3/h	3000
Sound pressure level LpA at 3 m	dB(A)	55
Weight	kg	40
Ingress protection rating	-	IP44

Dimensions

B	B1	H	H1	L	L1	K
680	785	655	518	360	286	G 3/4''

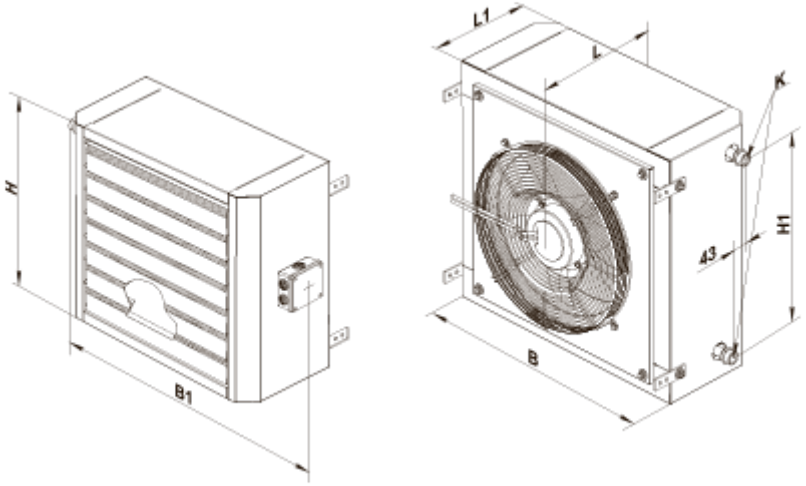

Accessories

Temperature regulators

Name	Photo	Description
TST-1-300		Temperature regulator
TSTD-1-300		Temperature regulator
RTS-1-400		Temperature regulator
RTSD-1-400		Temperature regulator

Other accessories

Name	Photo	Description
MKP-AOW		Mounting angles
MK-AOW 30		Mounting brackets
UWT-1E		Control unit