AM 200 VRF

Adjustable plastic ventilation grille

• Casing material: Coated steel

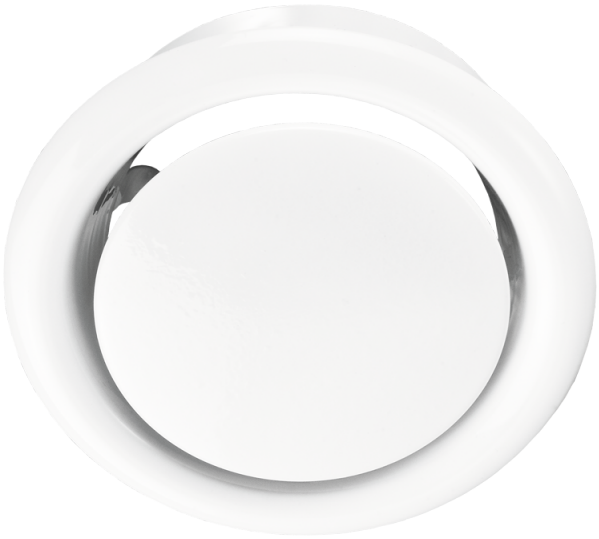

	Unit of measurement	AM 200 VRF
Connected air duct size	mm	200

Dimensions

D	D1	D2	D3
199	225	178	235

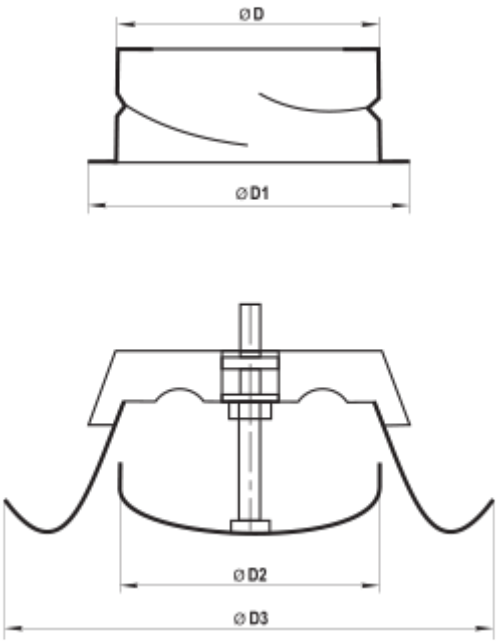
ØD
ØD1
ØD2
ØD3