AM 200 PRF

Metal wall & ceiling disc valve with a flange and locking ring

• Casing material: Coated steel



	Unit of measurement	AM 200 PRF
Connected air duct size	mm	200

Dimensions

D	D1	D2	D3
199	225	200	249

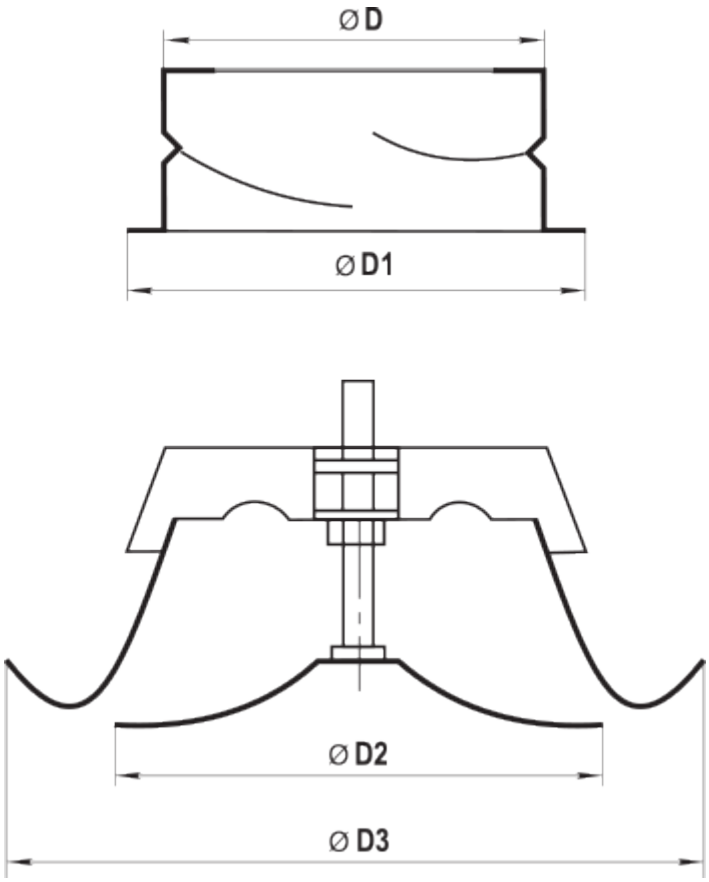
Ø D
Ø D1
Ø D2
Ø D3