AM 150 VRF

Adjustable plastic ventilation grille

• Casing material: Coated steel

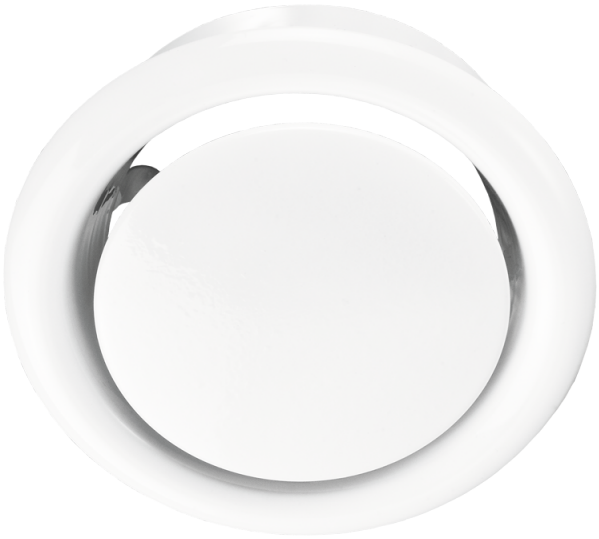

	Unit of measurement	AM 150 VRF
Connected air duct size	mm	150

Dimensions

D	D1	D2	D3
149	173	128	184

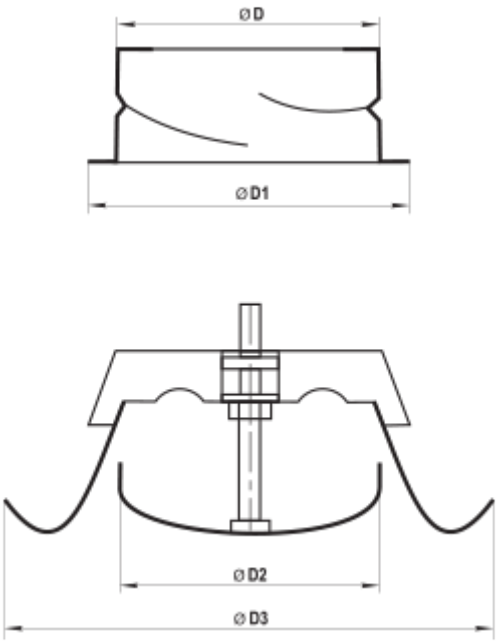
ØD
ØD1
ØD2
ØD3