AM 150 PRF

Metal wall & ceiling disc valve with a flange and locking ring

• Casing material: Coated steel



	Unit of measurement	AM 150 PRF
Connected air duct size	mm	150

Dimensions

D	D1	D2	D3
149	175	144	199

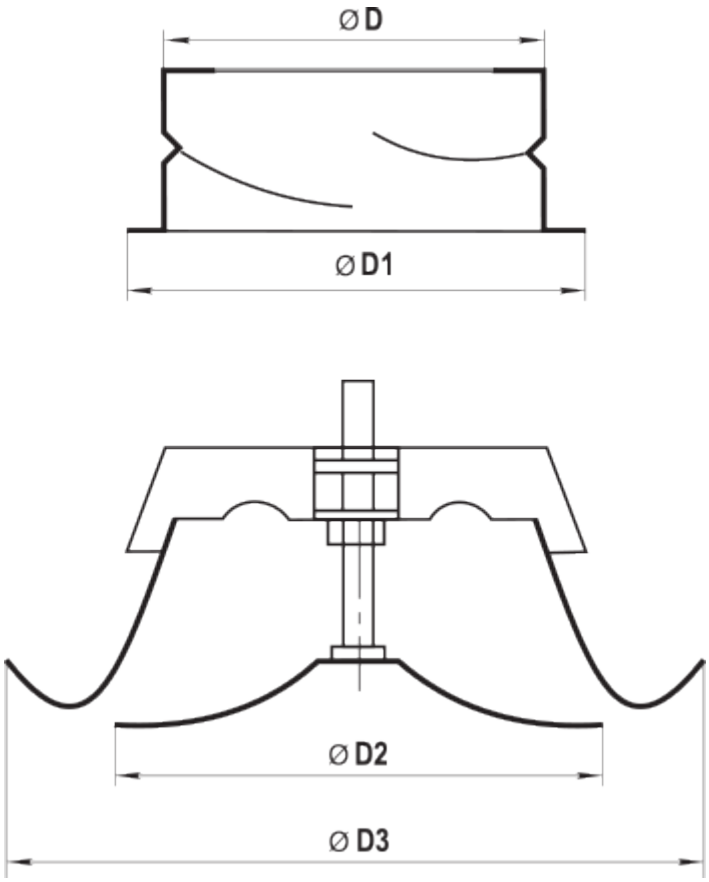
Ø D
Ø D1
Ø D2
Ø D3