AM 100 VRF

Adjustable plastic ventilation grille

• Casing material: Coated steel

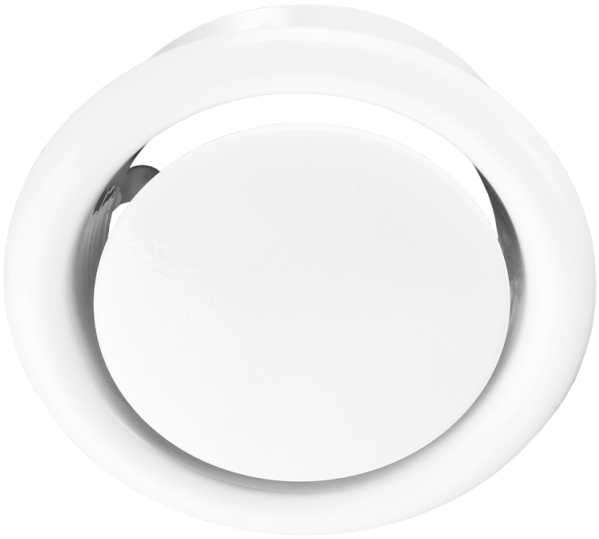

	Unit of measurement	AM 100 VRF
Connected air duct size	mm	100

Dimensions

D	D1	D2	D3
99	123	75	128

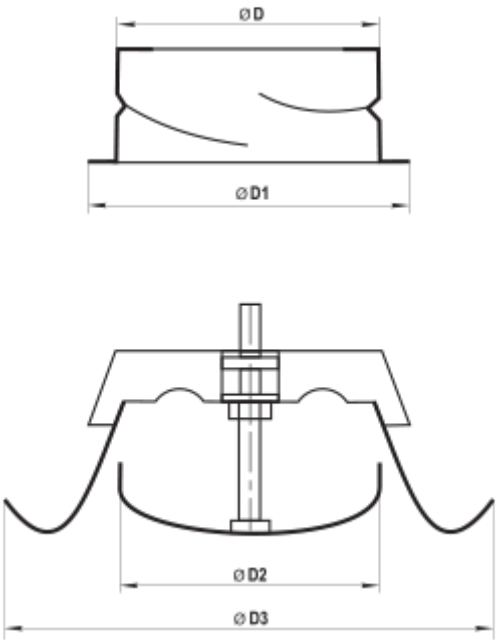
ØD
ØD1
ØD2
ØD3