# Alta 100 TR



Quiet axial extract fans with automatic shutters

- Sound pressure level LpA at 3 m: 25
- Impeller type: Mixed-flow
- Casing material: Plastic
- Backdraft protection: Automatic shutters
- Motion sensor
- Timer: Turn off timer

| | Unit of measurement | Alta 100 TR |
|---|---|---|
| Connected air duct size | mm | 100 |
| Maximum supply voltage | V | 240 |
| Minimum supply voltage | V | 220 |
| Power supply frequency | Hz | 50 |
| Rated power | W | 11 |
| Unit current | A | 0.056 |
| Maximum airflow | $m^3/h$ | 90 |
| Rotation speed at 50hz | - | 2300 |
| Sound pressure level LpA at 3 m | dB(A) | 25 |
| Weight | kg | 0.63 |
| Transported air temperature (max) | °C | 40 |
| Transported air temperature (min) | °C | 1 |
| Ingress protection rating | - | IP24 |
| Impeller material | - | Plastic |

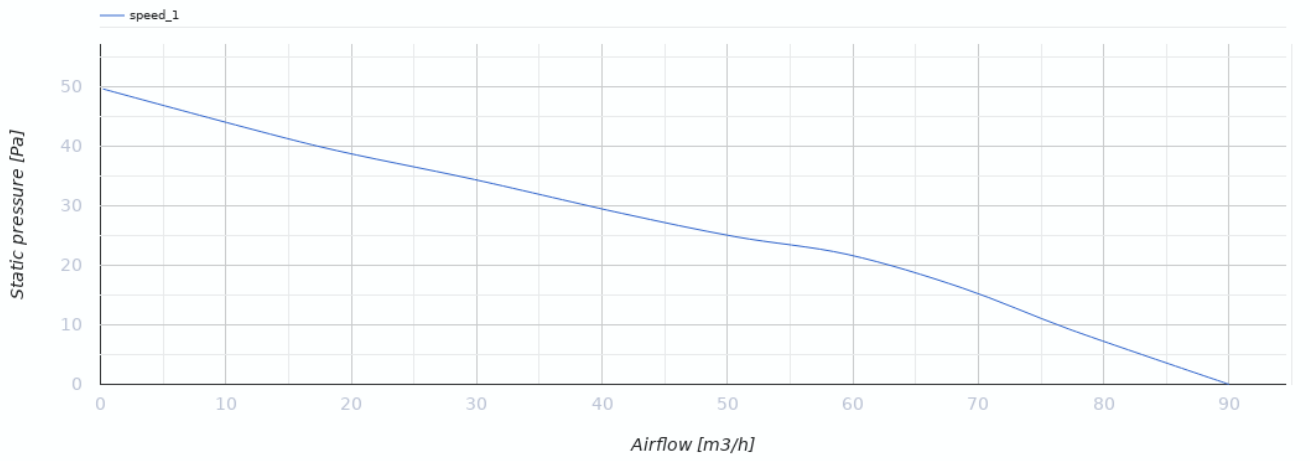


## Dimensions

| D | B | L | L1 |
|---|---|---|---|
| 99 | 168 | 110 | 29 |

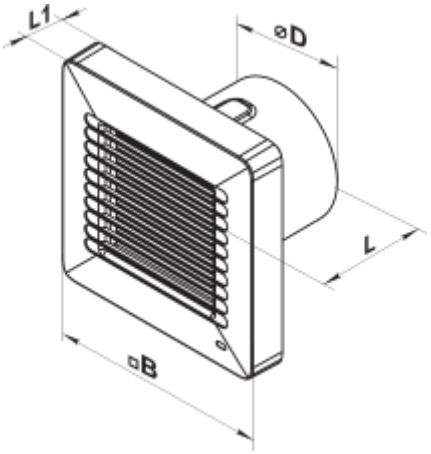


## Accessories

### Flanges

| Name | Photo | Description |
|---|---|---|
| FO 100 |  | The window flange |

## Ecodesign

| Trademark | Vents | | | | | |
|---|---|---|---|---|---|---|
| Model | Alta 100 TR | | | | | |
| Specific energy consumption (SEC) (kWh/(m²/a)) | Cold | | Average | | Warm | |
| | -30.1 | B | -13.7 | E | -4.3 | F |
| Type of ventilation unit | Unidirectional | | | | | |
| Type of drive installed | Single speed | | | | | |
| Type of heat recovery system | None | | | | | |
| Maximum flow rate (m³/h) | 90 | | | | | |
| Electric power input (W) | 10 | | | | | |
| Reference flow rate (m³/s) | 0.018 | | | | | |
| Specific power input (SPI) (W/(m³/h)) | 0.111 | | | | | |
| Control typology | Manual control | | | | | |
| Maximum external leakage rates (%) | 2.7 | | | | | |
| Declared typology | RVU UVU | | | | | |
| Sound power level (dB(A)) | 45 | | | | | |
| The annual electricity consumption (AEC) (kWh/a) | Cold | | Average | | Warm | |
| | 139 | | 139 | | 139 | |
| The annual heating saved (AHS) (kWh/a) | Cold | | Average | | Warm | |
| | 3355 | | 1715 | | 776 | |