Alta 100 TR L



Quiet axial extract fans with automatic shutters

- Sound pressure level LpA at 3 m: 25
- Impeller type: Mixed-flow
- Casing material: Plastic
- Backdraft protection: Automatic shutters
- Motion sensor
- Timer: Turn off timer
- Ball bearing

	Unit of measurement	Alta 100 TR L
Connected air duct size	mm	100
Maximum supply voltage	V	240
Minimum supply voltage	V	220
Power supply frequency	Hz	50
Rated power	W	11
Unit current	A	0.056
Maximum airflow	m^3/h	90
Rotation speed at 50hz	-	2300
Sound pressure level LpA at 3 m	dB(A)	25
Weight	kg	0.63
Transported air temperature (max)	°C	40
Transported air temperature (min)	°C	1
Ingress protection rating	-	IP24
Impeller material	-	Plastic

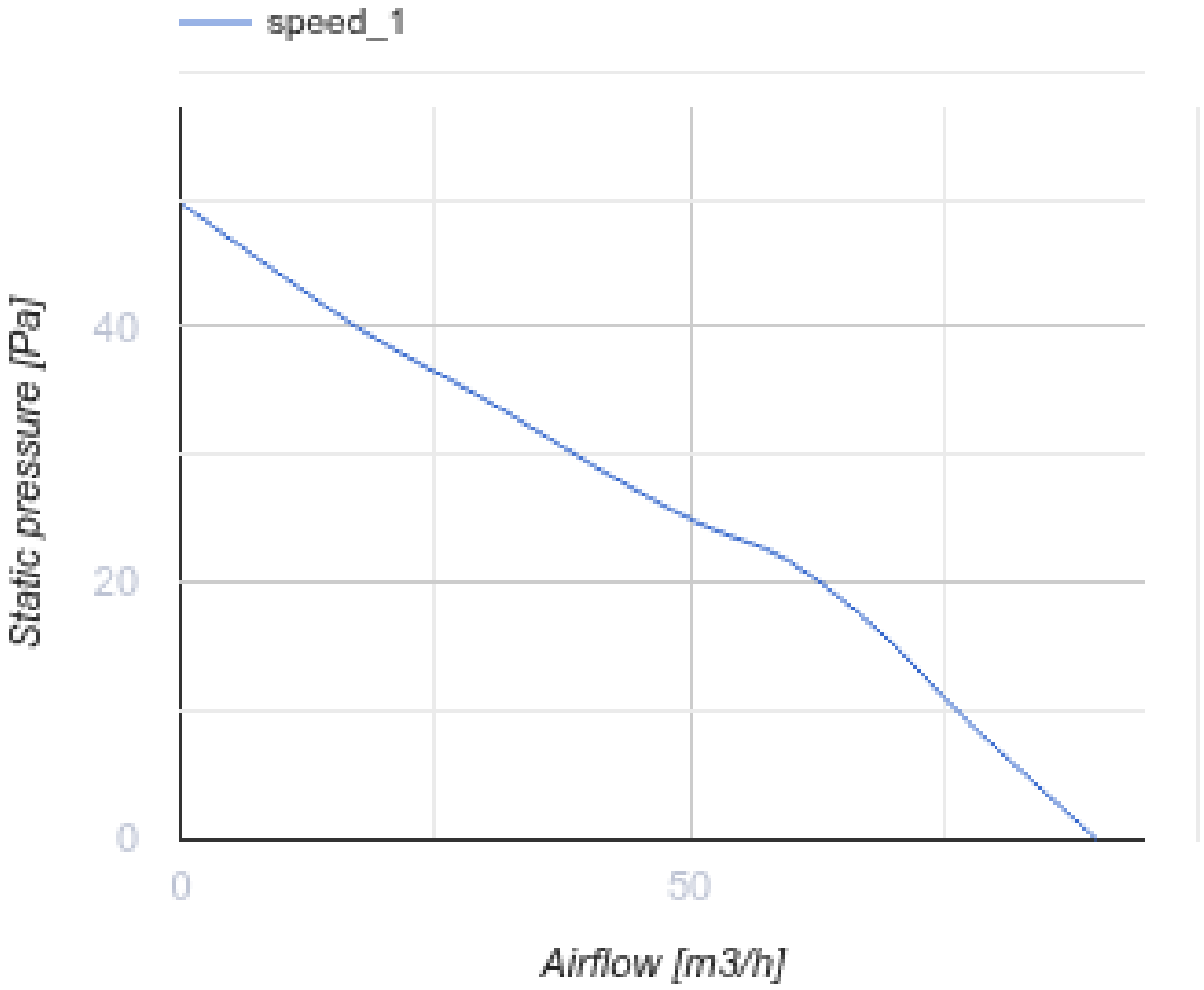

Dimensions

D	B	L	L1
99	168	110	29

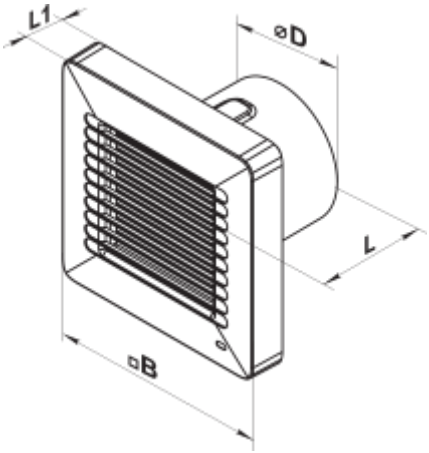

Accessories

Flanges

Name	Photo	Description
FO 100		The window flange

Ecodesign

Trademark	Vents					
Model	Alta 100 TR L					
Specific energy consumption (SEC) (kWh/(m²/a))	Cold		Average		Warm	
	-30.1	B	-13.7	E	-4.3	F
Type of ventilation unit	Unidirectional					
Type of drive installed	Single speed					
Type of heat recovery system	None					
Maximum flow rate (m³/h)	90					
Electric power input (W)	10					
Reference flow rate (m³/s)	0.018					
Specific power input (SPI) (W/(m³/h))	0.111					
Control typology	Manual control					
Maximum external leakage rates (%)	2.7					
Declared typology	RVU UVU					
Sound power level (dB(A))	45					
The annual electricity consumption (AEC) (kWh/a)	Cold		Average		Warm	
	139		139		139	
The annual heating saved (AHS) (kWh/a)	Cold		Average		Warm	
	3355		1715		776	