Ab DVP/DVK 795x795/250

For connection of the square ceiling diffusers DVP and DVK to round air ducts

- Casing material: Galvanized steel

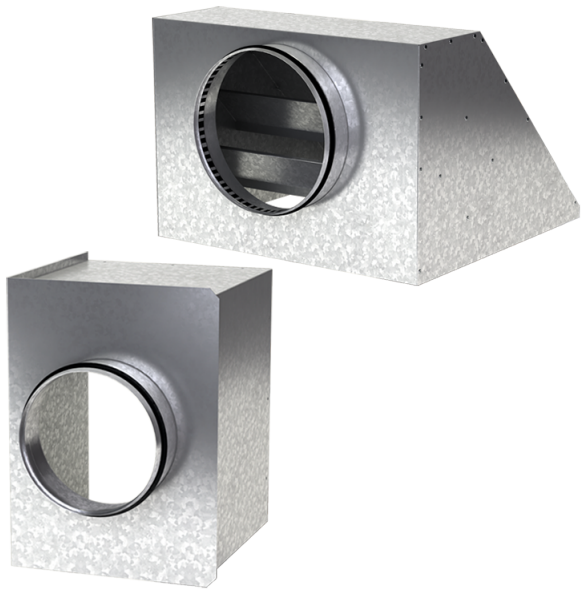

	Unit of measurement	Ab DVP/DVK 795x795/250
Connected air duct size	mm	250
Weight	kg	7.98

Dimensions

a	b	ØD	K
792.6	792.6	250	847

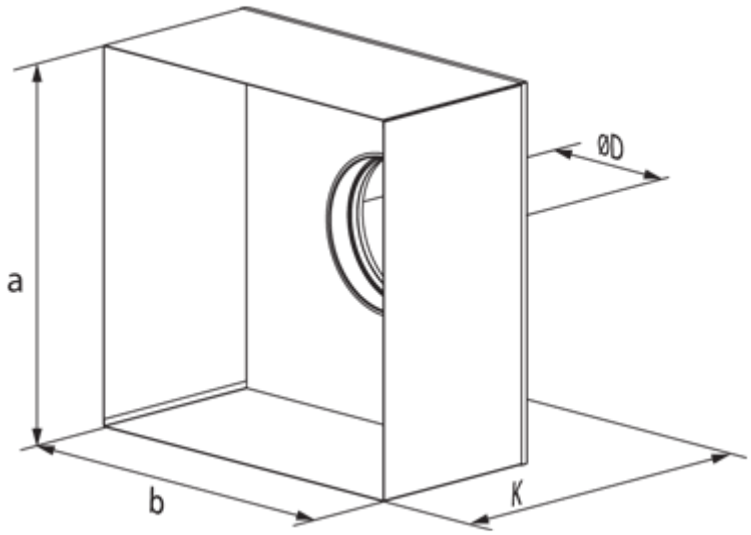
ØD
a
b
K