Ab DVP/DVK 595x595/250

For connection of the square ceiling diffusers DVP and DVK to round air ducts

- Casing material: Galvanized steel

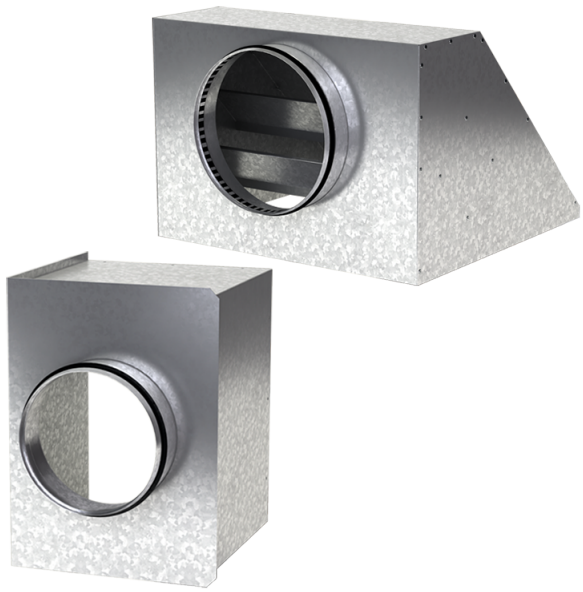

	Unit of measurement	Ab DVP/DVK 595x595/250
Connected air duct size	mm	250
Weight	kg	5.44

Dimensions

a	b	ØD	K
592.6	592.6	250	647

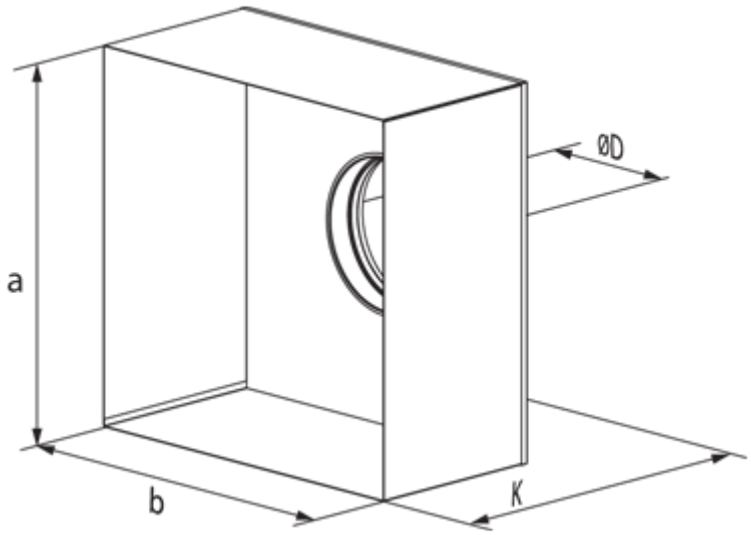
ØD
a
b
K