Ab DVP/DVK 495x495/250

For connection of the square ceiling diffusers DVP and DVK to round air ducts

- Casing material: Galvanized steel

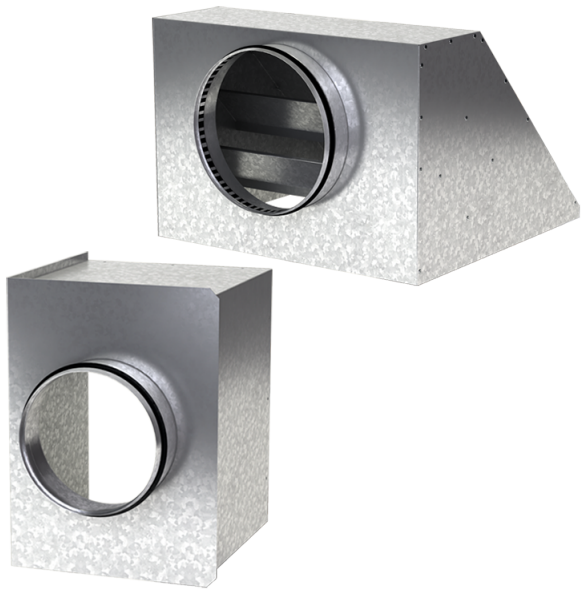

	Unit of measurement	Ab DVP/DVK 495x495/250
Connected air duct size	mm	250
Weight	kg	4

Dimensions

a	b	ØD	K
492.6	492.6	250	547

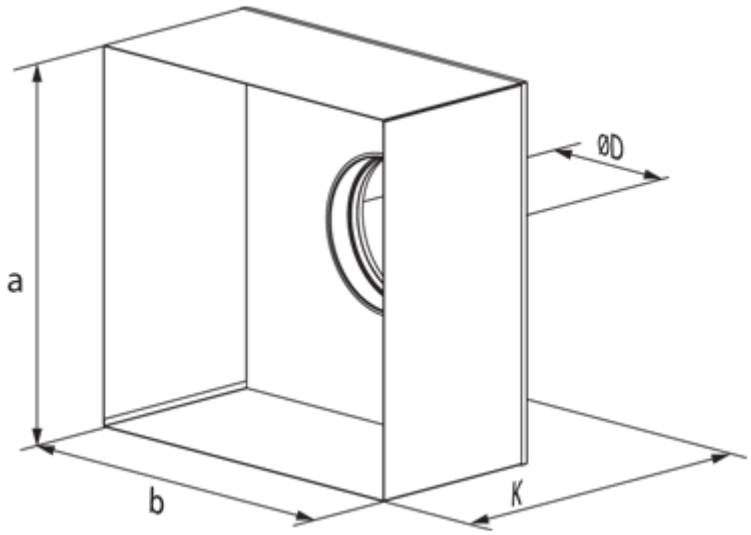
ØD
a
b
K