Ab DVP/DVK 445x445/160

For connection of the square ceiling diffusers DVP and DVK to round air ducts

- Casing material: Galvanized steel

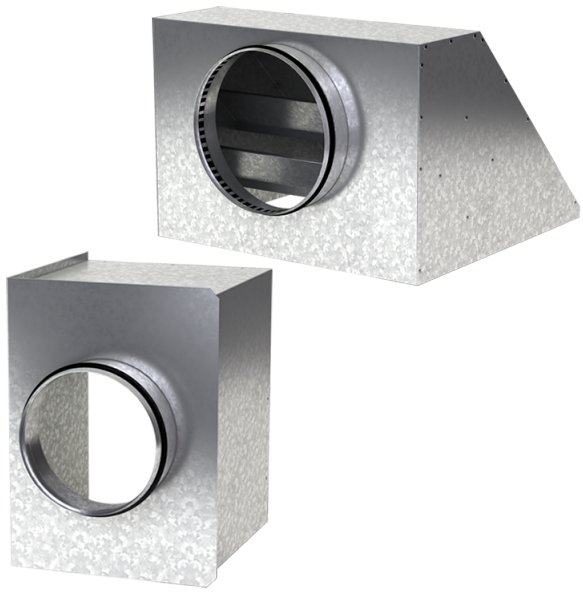

	Unit of measurement	Ab DVP/DVK 445x445/160
Connected air duct size	mm	160
Weight	kg	2.9

Dimensions

a	b	ØD	K
442.6	442.6	160	497

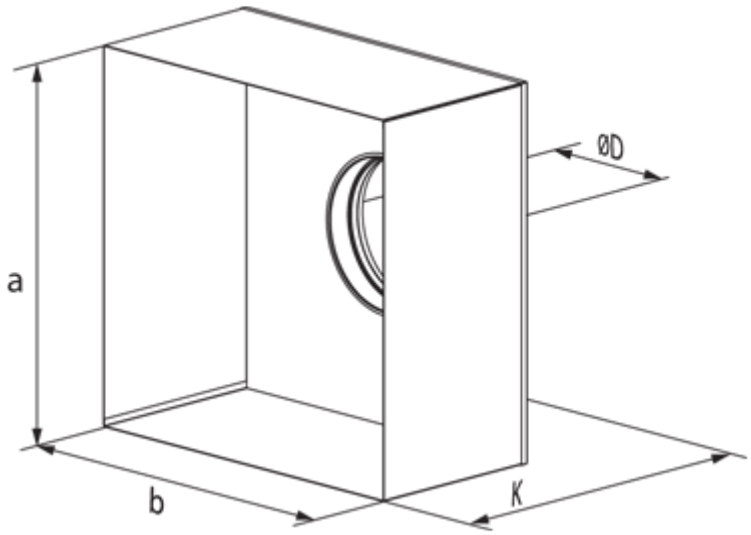
ØD
a
b
K