Ab DVP/DVK 295x295/140

For connection of the square ceiling diffusers DVP and DVK to round air ducts

- Casing material: Galvanized steel

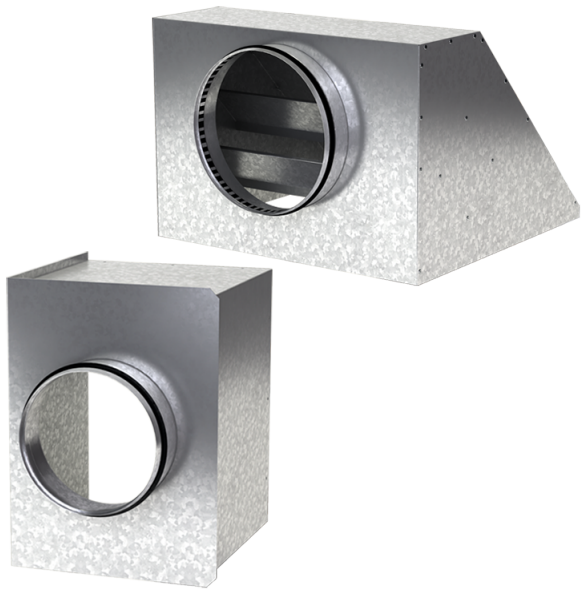

	Unit of measurement	Ab DVP/DVK 295x295/140
Connected air duct size	mm	140
Weight	kg	1.44

Dimensions

a	b	ØD	K
292.6	292.6	140	347

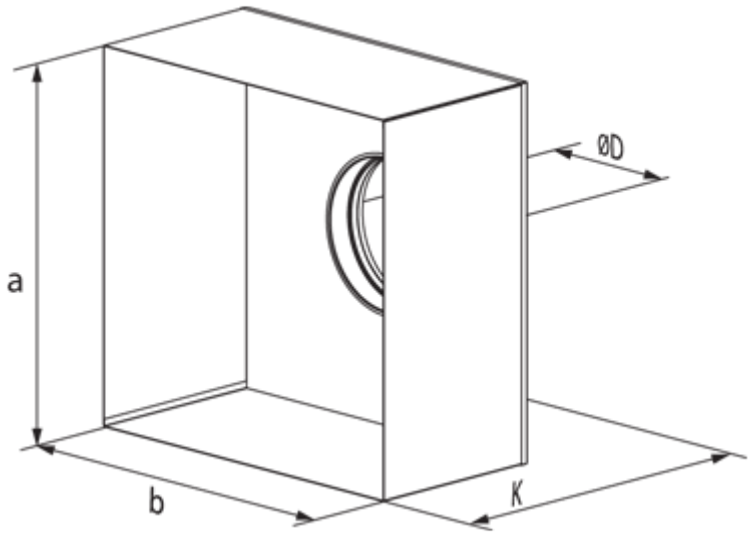
ØD
a
b
K