Ab DP 596x596/315



For connection of the square ceiling diffusers DP to round air ducts

- Casing material: Galvanized steel

	Unit of measurement	Ab DP 596x596/315
Connected air duct size	mm	315
Weight	kg	5.98

Dimensions

l	h	ØD	K
484.6	484.6	315	549.6

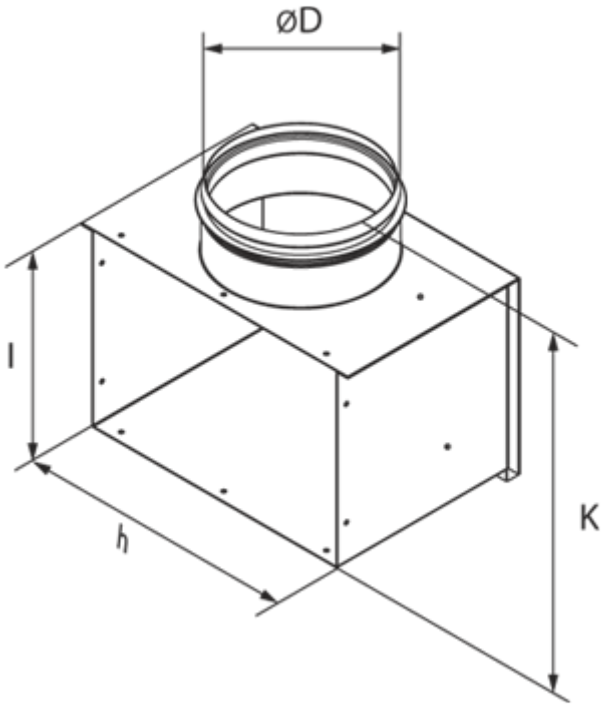
ØD
l
h
K