Ab DP 596x394/250



For connection of the square ceiling diffusers DP to round air ducts

- Casing material: Galvanized steel

	Unit of measurement	Ab DP 596x394/250
Connected air duct size	mm	250
Weight	kg	3.8

Dimensions

l	h	ØD	K
488.6	282.6	250	347.6

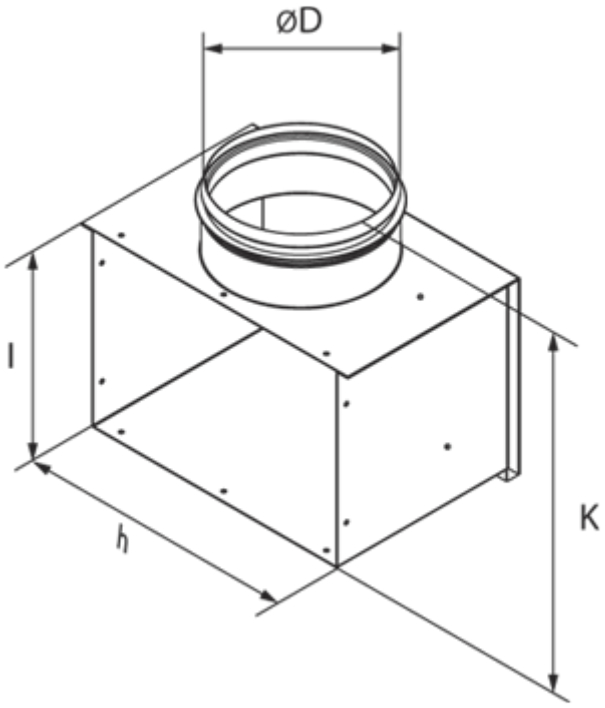
ØD
l
h
K