Ab DP 460x460/100



For connection of the square ceiling diffusers DP to round air ducts

- Casing material: Galvanized steel

	Unit of measurement	Ab DP 460x460/100
Connected air duct size	mm	100
Weight	kg	2.28

Dimensions

l	h	ØD	K
348.6	348.6	100	413.6

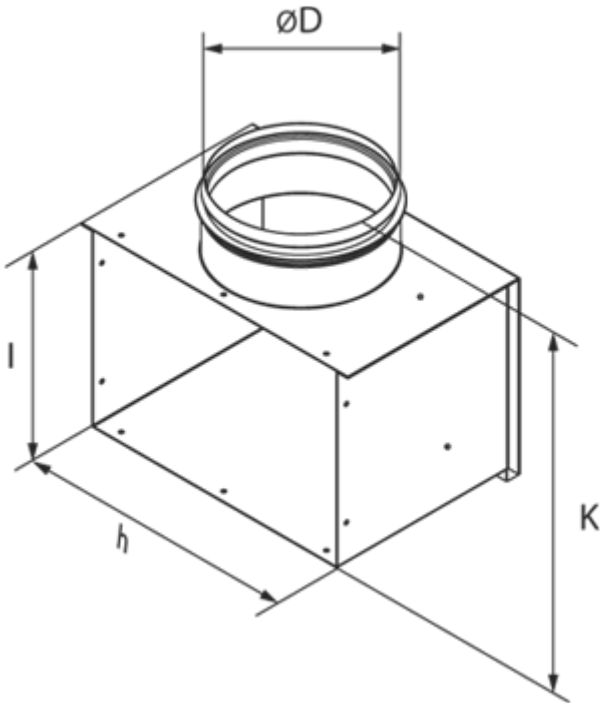
ØD
l
h
K