Ab DP 460x260/125



For connection of the square ceiling diffusers DP to round air ducts

- Casing material: Galvanized steel

	Unit of measurement	Ab DP 460x260/125
Connected air duct size	mm	125
Weight	kg	1.41

Dimensions

l	h	ØD	K
348.6	148.6	125	213.6

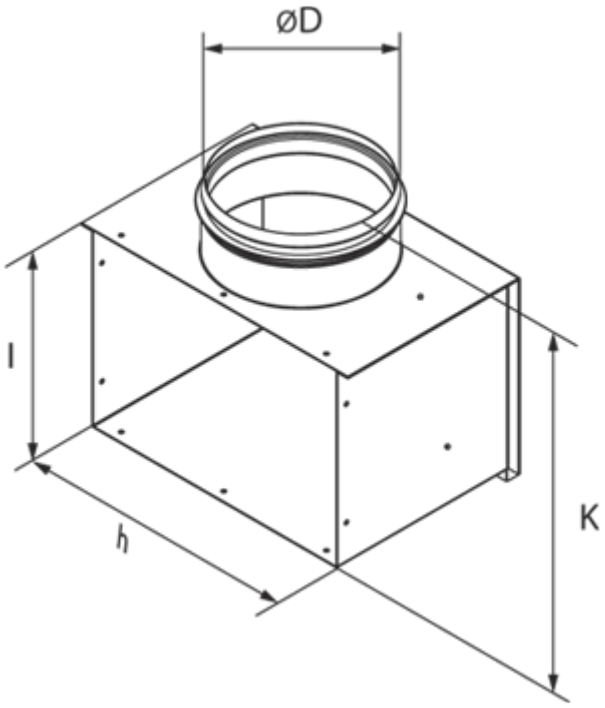
ØD
l
h
K