Ab DP 394x394/100



For connection of the square ceiling diffusers DP to round air ducts

- Casing material: Galvanized steel

	Unit of measurement	Ab DP 394x394/100
Connected air duct size	mm	100
Weight	kg	1.74

Dimensions

l	h	ØD	K
282.6	282.6	100	347.6

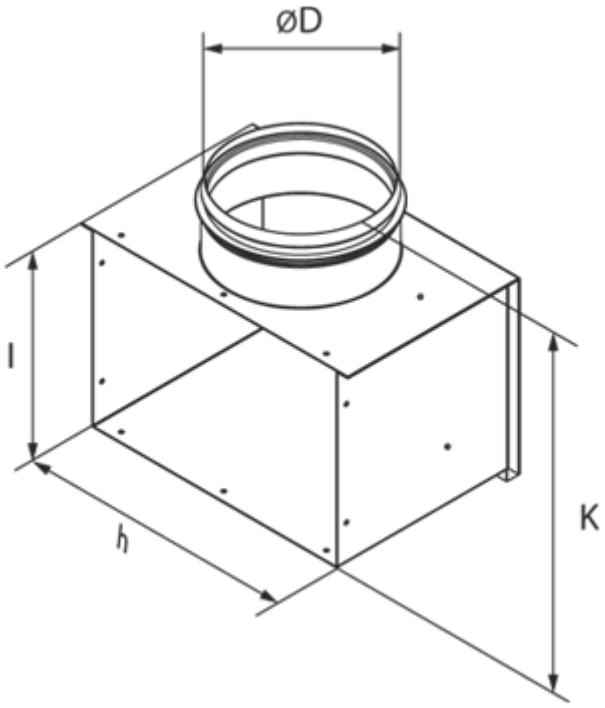
ØD
l
h
K