Ab DP 394x325/150



For connection of the square ceiling diffusers DP to round air ducts

- Casing material: Galvanized steel

	Unit of measurement	Ab DP 394x325/150
Connected air duct size	mm	150
Weight	kg	1.9

Dimensions

l	h	ØD	K
282.6	213.6	150	278.6

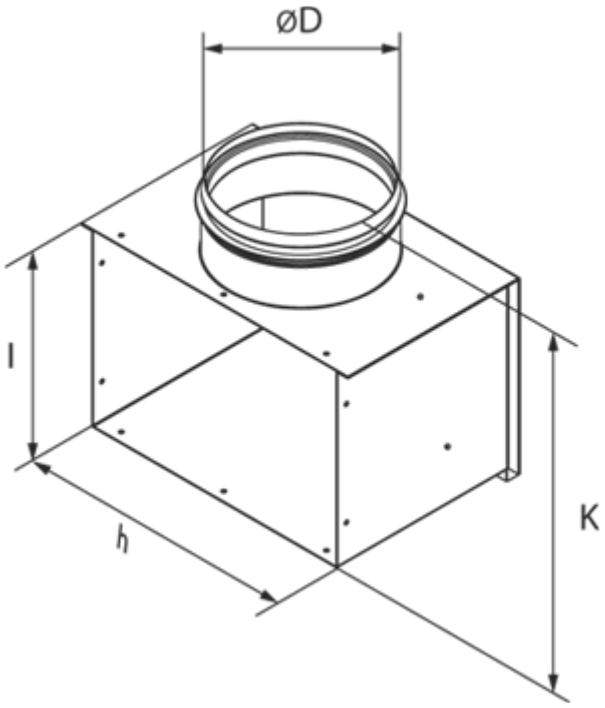
ØD
l
h
K