Ab DP 325x325/160



For connection of the square ceiling diffusers DP to round air ducts

- Casing material: Galvanized steel

	Unit of measurement	Ab DP 325x325/160
Connected air duct size	mm	160
Weight	kg	1.56

Dimensions

l	h	ØD	K
213.6	213.6	160	278.6

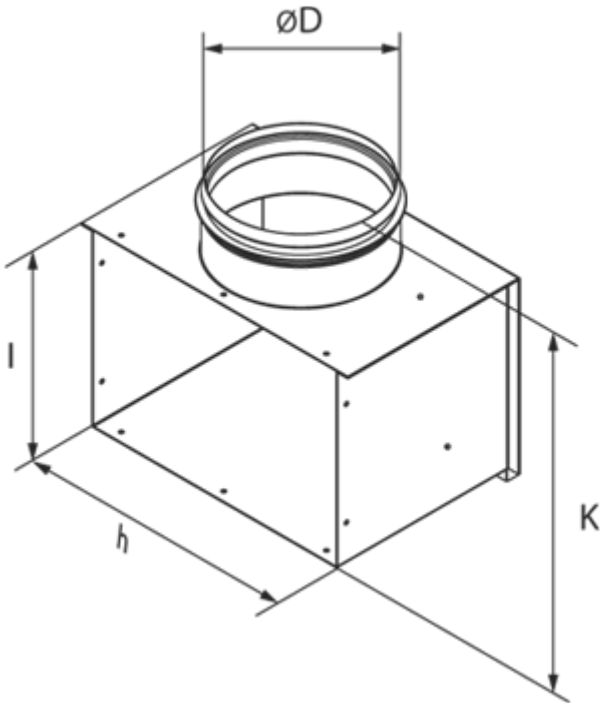
ØD
l
h
K