150 X1 turbo



Axial extract fans with thin front panels

- Sound pressure level LpA at 3 m: 41
- Casing material: Plastic

	Unit of measurement	150 X1 turbo
Connected air duct size	mm	150
Phases	-	1
Minimum supply voltage	V	220
Maximum supply voltage	V	240
Power supply frequency	Hz	50
Rated power	W	29
Unit current	A	0.13
Maximum airflow	m^3/h	345
Rotation speed at 50hz	-	2400
Sound pressure level LpA at 3 m	dB(A)	41
Weight	kg	1.06
Ambient air temperature min	°C	1
Ambient air temperature max	°C	40
Ingress protection rating	-	IP24
Impeller material	-	Plastic

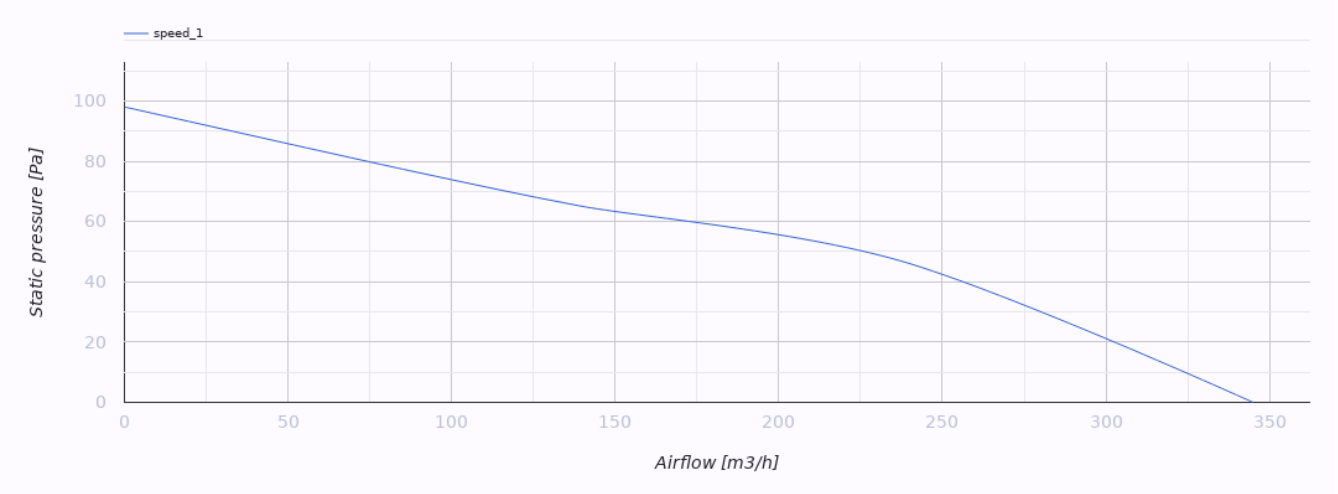

Dimensions

Ø D	B	H	L	L1
150	205	165	132	13

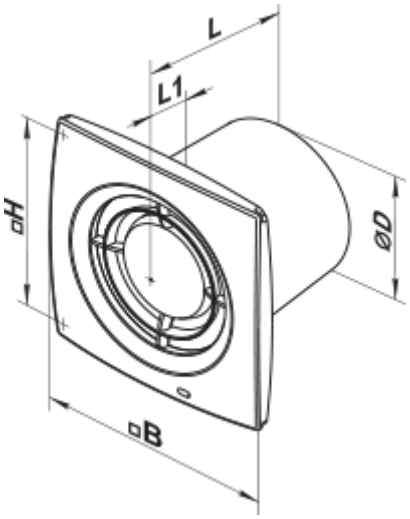

Accessories

Backdraft dampers

Name	Photo	Description
KO 150		Back valve is designed for domestic fan

Flanges

Name	Photo	Description

FO 150		The window flange

Ecodesign

Trademark	Vents					
Model	150 X1 turbo					
Specific energy consumption (SEC) (kWh/(m²/a))	Cold		Average		Warm	
	-32	B	-15	E	-6	F
Type of ventilation unit	Unidirectional					
Type of drive installed	Multi-speed					
Type of heat recovery system	None					
Maximum flow rate (m³/h)	345					
Electric power input (W)	29					
Reference flow rate (m³/s)	0.067					
Specific power input (SPI) (W/(m³/h))	0.054					
Control typology	Manual control					
Maximum external leakage rates (%)	2.7					
Declared typology	RVU UVU					
Sound power level (dB(A))	61					
The annual electricity consumption (AEC) (kWh/a)	Cold		Average		Warm	
	100		100		100	
The annual heating saved (AHS) (kWh/a)	Cold		Average		Warm	
	3400		1700		800	