150 X1 L turbo



Axial extract fans with thin front panels

- Sound pressure level LpA at 3 m: 41
- Casing material: Plastic
- Ball bearing

	Unit of measurement	150 X1 L turbo
Connected air duct size	mm	150
Phases	-	1
Minimum supply voltage	V	220
Maximum supply voltage	V	240
Power supply frequency	Hz	50
Rated power	W	29
Unit current	A	0.13
Maximum airflow	m^3/h	345
Rotation speed at 50hz	-	2400
Sound pressure level LpA at 3 m	dB(A)	41
Weight	kg	1.06
Ambient air temperature min	°C	1
Ambient air temperature max	°C	40
Ingress protection rating	-	IP24
Impeller material	-	Plastic

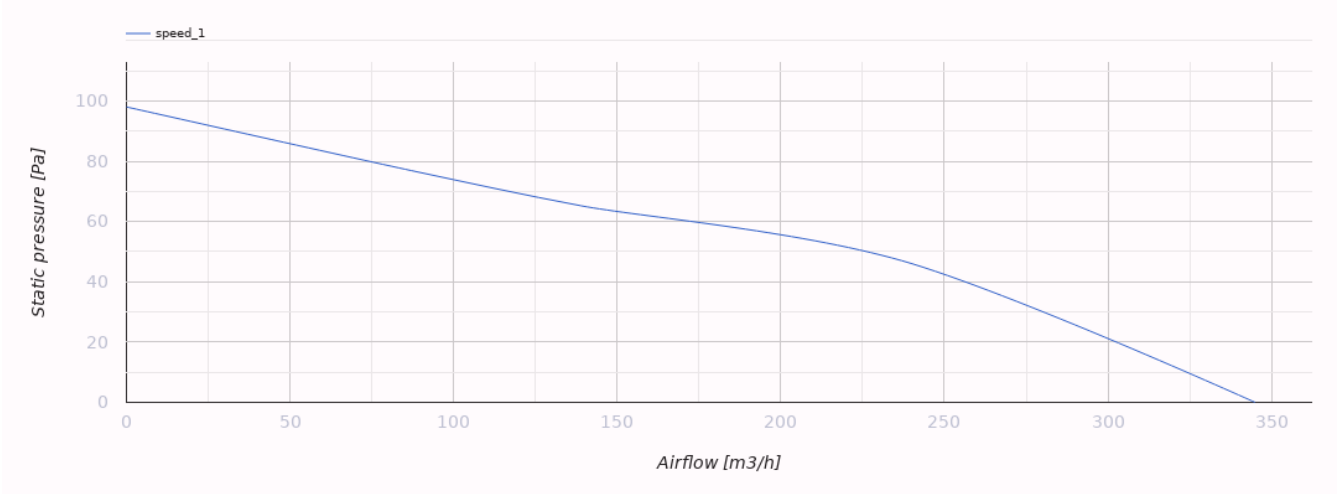

Dimensions

Ø D	B	H	L	L1
150	205	165	132	13

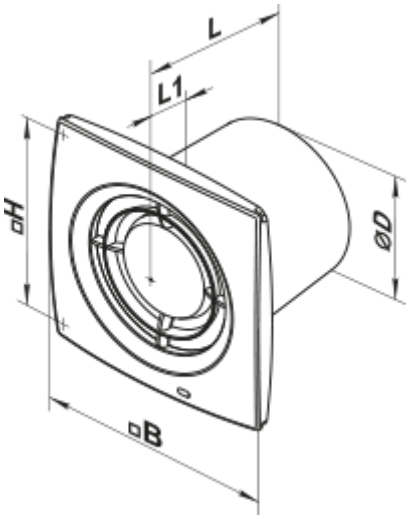

Accessories

Backdraft dampers

Name	Photo	Description
KO 150		Back valve is designed for domestic fan

Flanges

Name	Photo	Description

FO 150		The window flange