150 X1 (220V/60Hz)

Axial extract fans with thin front panels

• Casing material: Plastic



	Unit of measurement	150 X1 (220V/60Hz)
Connected air duct size	mm	150
Phases	-	1
Minimum supply voltage	V	220
Maximum supply voltage	V	240
Power supply frequency	Hz	60
Weight	kg	0.92
Ambient air temperature min	°C	1
Ambient air temperature max	°C	40
Ingress protection rating	-	IP24
Impeller material	-	Plastic

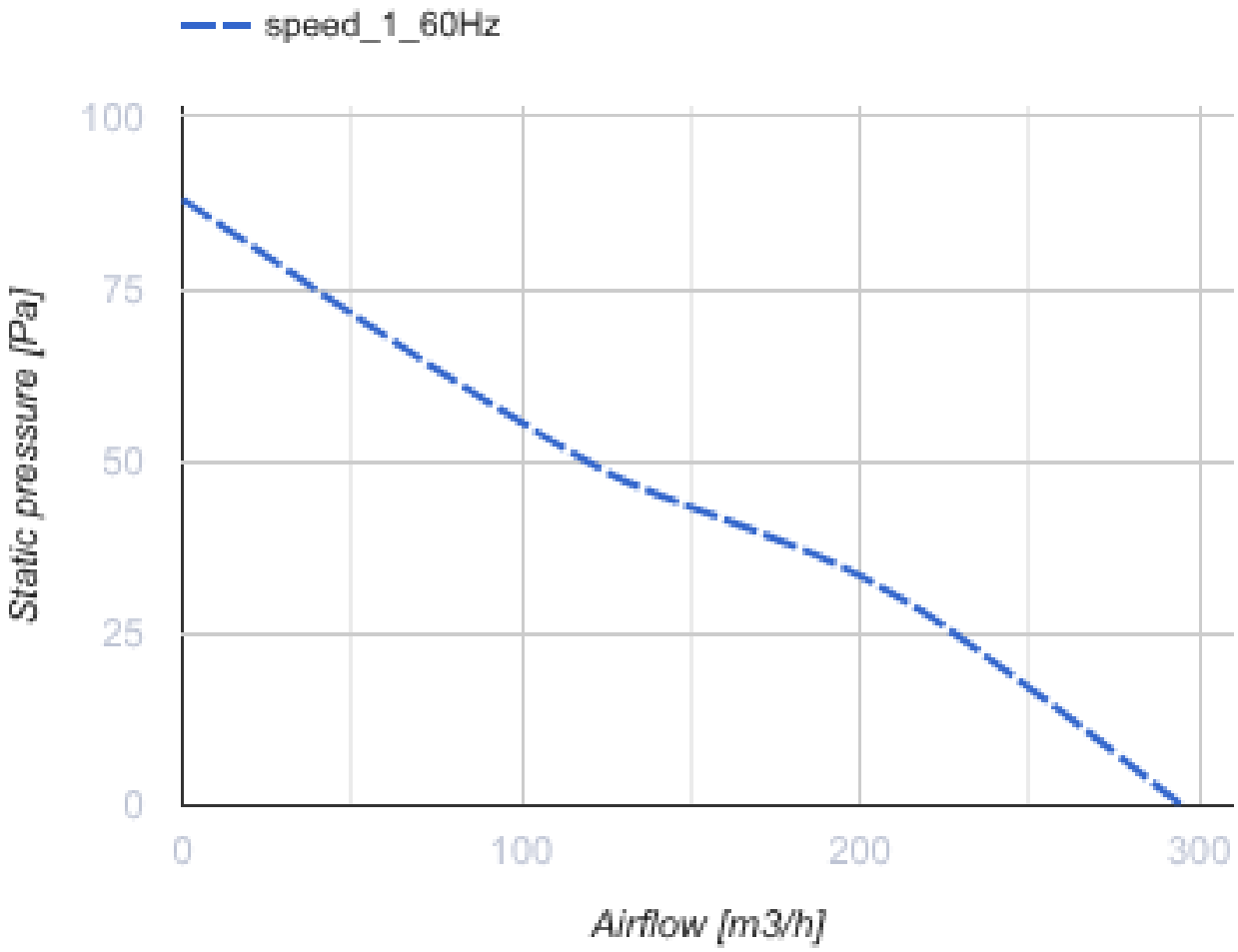

Dimensions

Ø D	B	H	L	L1
150	205	165	132	13

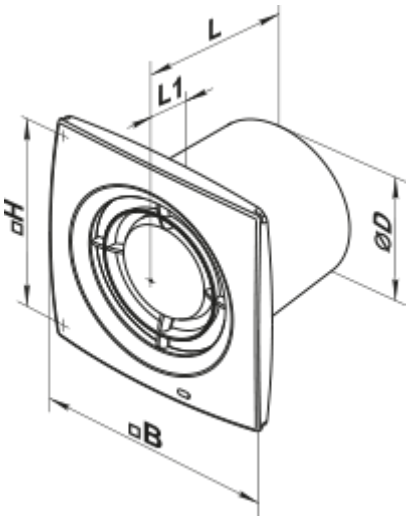

Accessories

Backdraft dampers

Name	Photo	Description
KO 150		Back valve is designed for domestic fan

Flanges

Name	Photo	Description
FO 150		The window flange