150 VKO turbo

Axial high-performance inline fans for extract or supply ventilation

- Sound pressure level LpA at 3 m: 44
- Casing material: Plastic



	Unit of measurement	150 VKO turbo
Connected air duct size	mm	150
Phases	-	1
Maximum supply voltage	V	240
Minimum supply voltage	V	220
Power supply frequency	Hz	50
Rated power	W	29
Unit current	A	0.13
Maximum airflow	m^3/h	358
Rotation speed at 50hz	-	2400
Sound pressure level LpA at 3 m	dB(A)	44
Weight	kg	0.8
Ambient air temperature min	°C	1
Ambient air temperature max	°C	40
Ingress protection rating	-	IPX4
Impeller material	-	Plastic

Dimensions

ØD	ØD1	L	L1
150	154	108	46

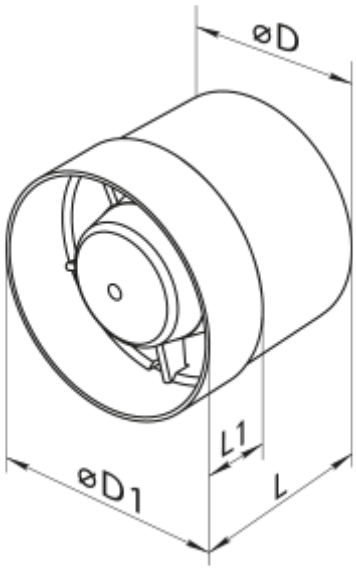

Ecodesign

Trademark	Vents					
Model	150 VKO turbo					
Specific energy consumption (SEC) (kWh/(m²/a))	Cold		Average		Warm	
	-32	B	-16	E	-6	F
Type of ventilation unit	Unidirectional					
Type of drive installed	Multi-speed					
Type of heat recovery system	None					
Maximum flow rate (m³/h)	358					
Electric power input (W)	29					
Reference flow rate (m³/s)	0.07					
Specific power input (SPI) (W/(m³/h))	0.052					
Control typology	Manual control					
Maximum external leakage rates (%)	2.7					
Sound power level (dB(A))	64					
Declared typology	RVU UVU					
The annual electricity consumption (AEC) (kWh/a)	Cold		Average		Warm	
	100		100		100	
The annual heating saved (AHS) (kWh/a)	Cold		Average		Warm	
	3400		1700		800	