150 Silenta-MT



Quiet axial extract fans

- Sound pressure level LpA at 3 m: 33
- Impeller type: Axial
- Casing material: Plastic
- Timer: Turn off timer

	Unit of measurement	150 Silenta-MT
Connected air duct size	mm	150
Maximum supply voltage	V	240
Minimum supply voltage	V	220
Power supply frequency	Hz	50
Rated power	W	20
Unit current	A	0.14
Maximum airflow	m^3/h	242
Sound pressure level LpA at 3 m	dB(A)	33
Weight	kg	0.82
Ambient air temperature max	°C	40
Ambient air temperature min	°C	1
Ingress protection rating	-	IP34
Impeller material	-	Plastic

Dimensions

Ø D	B	H	L	L1
150	206	182	106	26

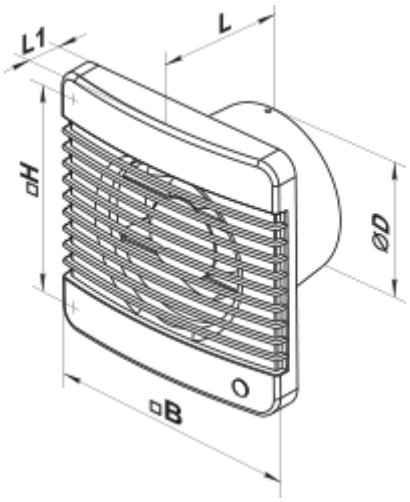

Accessories

Plastic

Name	Photo	Description
MV 150 V		Two-piece plastic grilles with angled louvers, round flange

Fittings

Name	Photo	Description
PVT 050/10		The adhesive PVC tape is an insulation tape made of plasticized PVC base covered with a glue layer
PVT 050/30		The adhesive PVC tape is an insulation tape made of plasticized PVC base covered with a glue layer
PVT 050/50		The adhesive PVC tape is an insulation tape made of plasticized PVC base covered with a glue layer
C 150		The clamps are designed for quick and reliable mounting and connection of various round ventilation system components. Clamps are made of stainless steel band

Flat duct

Name	Photo	Description
3805		Wall mounting

Flexible ducts

Name	Photo	Description

Polyvent N		Flexible uninsulated air duct made of metallized film

Backdraft dampers

Name	Photo	Description
KO 150		Back valve is designed for domestic fan

Window vents

Name	Photo	Description
PO 400		Window ventilators for supply ventilation

Plastic

Name	Photo	Description
MV 152 VK		Supply and exhaust hoods

Metal

Name	Photo	Description
MVM 152 V N		Exhaust metal hoods

Ecodesign

Trademark	Vents					
Model	150 Silenta-MT					
Specific energy consumption (SEC) (kWh/(m²/a))	Cold		Average		Warm	
	-35.1	A	-17.2	E	-6.9	F
Type of ventilation unit	Unidirectional					
Type of drive installed	Multi-speed					
Type of heat recovery system	None					
Maximum flow rate (m³/h)	240					
Electric power input (W)	20					
Reference flow rate (m³/s)	0.047					
Specific power input (SPI) (W/(m³/h))	0.054					
Control typology	Clock control					
Maximum external leakage rates (%)	2.7					
Declared typology	RVU UVU					
Sound power level (dB(A))	53					
The annual electricity consumption (AEC) (kWh/a)	Cold		Average		Warm	
	62		62		62	
The annual heating saved (AHS) (kWh/a)	Cold		Average		Warm	
	3667		1874		848	