150 S 12



Axial fans for exhaust ventilation

- Sound pressure level LpA at 3 m: 37
- Casing material: Plastic

	Unit of measurement	150 S 12
Connected air duct size	mm	150
Phases	-	1
Minimum supply voltage	V	12
Maximum supply voltage	V	12
Power supply frequency	Hz	50
Rated power	W	24
Unit current	A	2
Maximum airflow	m³/h	260
Rotation speed at 50hz	-	2300
Sound pressure level LpA at 3 m	dB(A)	37
Weight	kg	1.13
Ambient air temperature min	°C	1
Ambient air temperature max	°C	40
Ingress protection rating	-	IP34
Impeller material	-	Plastic

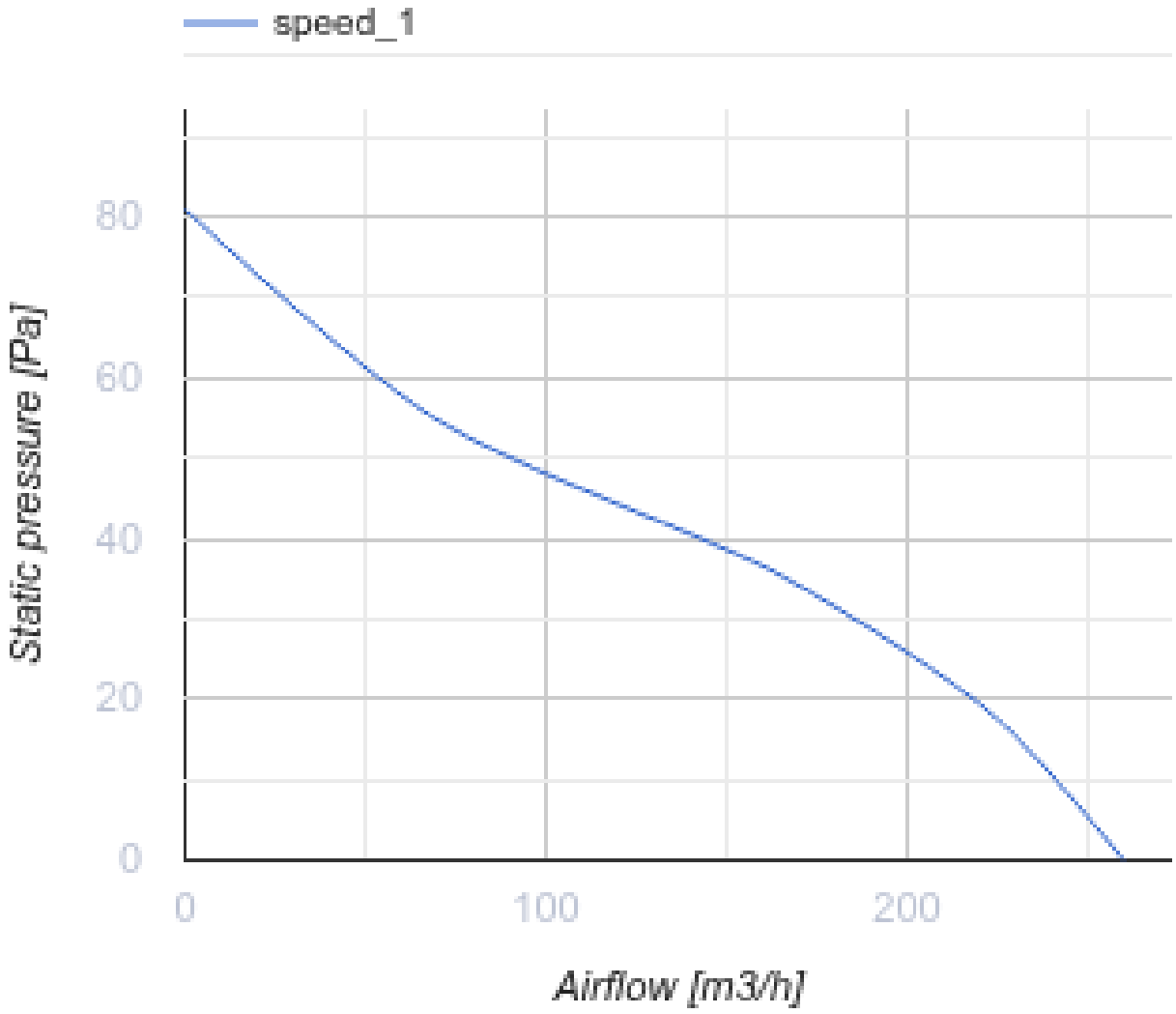

Dimensions

Ø D	B	H	L	L1
150	205	165	132	14

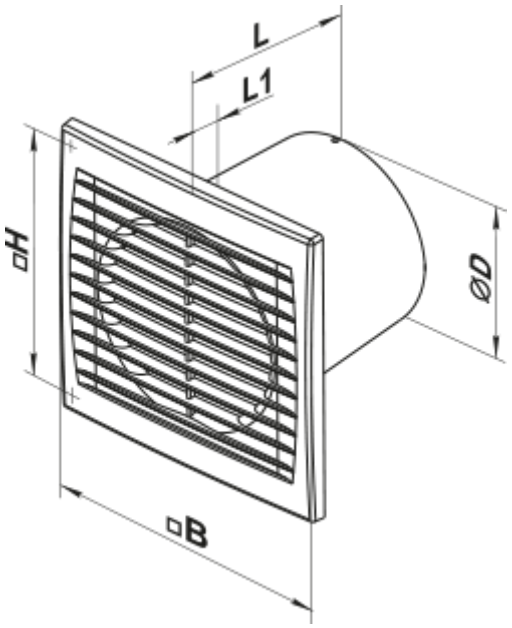

Accessories

Backdraft dampers

Name	Photo	Description
KO 150		Back valve is designed for domestic fan

Flanges

Name	Photo	Description
FO 150		The window flange

Ecodesign

Trademark	Vents					
Model	150 S 12					
Specific energy consumption (SEC) (kWh/(m²/a))	Cold		Average		Warm	
	-30.7	B	-14.3	E	-4.9	F
Type of ventilation unit	Unidirectional					
Type of drive installed	Single speed					
Type of heat recovery system	None					
Maximum flow rate (m³/h)	260					
Electric power input (W)	24					
Reference flow rate (m³/s)	0.051					
Specific power input (SPI) (W/(m³/h))	0.092					
Control typology	Manual control					
Maximum external leakage rates (%)	2.7					
Declared typology	RVU UVU					
Sound power level (dB(A))	57					
The annual electricity consumption (AEC) (kWh/a)	Cold		Average		Warm	
	116		116		116	
The annual heating saved (AHS) (kWh/a)	Cold		Average		Warm	
	3355		1715		776	