150 LD V L turbo



Axial decorative fans for extract ventilation with panels

- Sound pressure level LpA at 3 m: 39
- Casing material: Plastic
- Pull cord
- Ball bearing

	Unit of measurement	150 LD V L turbo
Connected air duct size	mm	150
Phases	-	1
Minimum supply voltage	V	220
Maximum supply voltage	V	240
Power supply frequency	Hz	50
Rated power	W	29
Unit current	A	0.13
Maximum airflow	m³/h	310
Rotation speed at 50hz	-	2400
Sound pressure level LpA at 3 m	dB(A)	39
Weight	kg	1.1
Ambient air temperature min	°C	1
Ambient air temperature max	°C	40
Ingress protection rating	-	IP34
Impeller material	-	Plastic

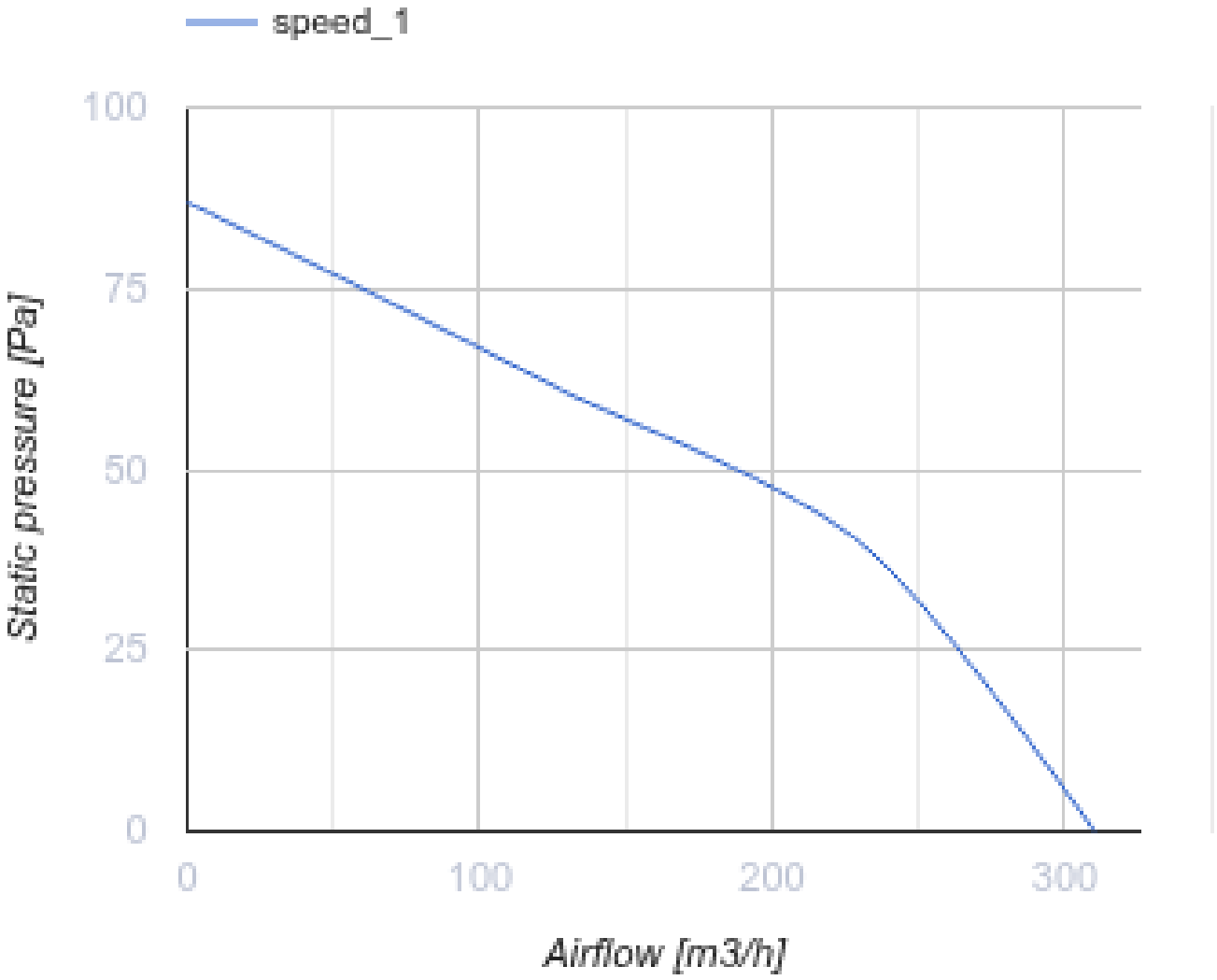

Dimensions

ØD	B	H	L	L1
150	206	165	154	36

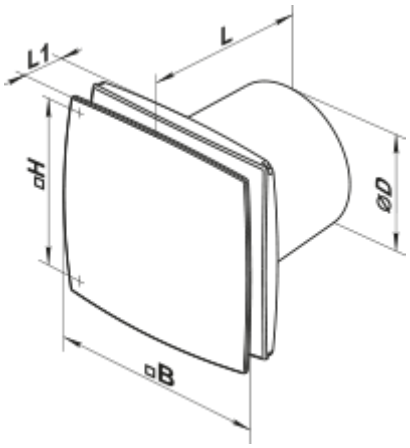

Accessories

Backdraft dampers

Name	Photo	Description
KO 150		Back valve is designed for domestic fan

Flanges

Name	Photo	Description
FO 150		The window flange

Ecodesign

Trademark	Vents					
Model	150 LD V L turbo					
Specific energy consumption (SEC) (kWh/(m²/a))	Cold		Average		Warm	
	30.6	B	14.2	E	4.8	F
Type of ventilation unit	Unidirectional					
Type of drive installed	Single speed					
Type of heat recovery system	None					
Maximum flow rate (m³/h)	310					
Electric power input (W)	29					
Reference flow rate (m³/s)	0.06					
Specific power input (SPI) (W/(m³/h))	0.094					
Control typology	Manual control					
Maximum external leakage rates (%)	2.7					
Declared typology	RVU UVU					
Sound power level (dB(A))	59					
The annual electricity consumption (AEC) (kWh/a)	Cold		Average		Warm	
	117		117		117	
The annual heating saved (AHS) (kWh/a)	Cold		Average		Warm	
	3355		1715		776	