150 LD TH L



Axial decorative fans for extract ventilation with panels

- Sound pressure level LpA at 3 m: 37
- Casing material: Plastic
- Humidity sensor
- Timer: Turn off timer
- Ball bearing

	Unit of measurement	150 LD TH L
Connected air duct size	mm	150
Phases	-	1
Minimum supply voltage	V	220
Maximum supply voltage	V	240
Power supply frequency	Hz	50
Rated power	W	24
Unit current	A	0.13
Maximum airflow	m^3/h	265
Rotation speed at 50hz	-	2400
Sound pressure level LpA at 3 m	dB(A)	37
Weight	kg	0.96
Ambient air temperature max	°C	40
Ambient air temperature min	°C	1
Ingress protection rating	-	IP34
Impeller material	-	Plastic

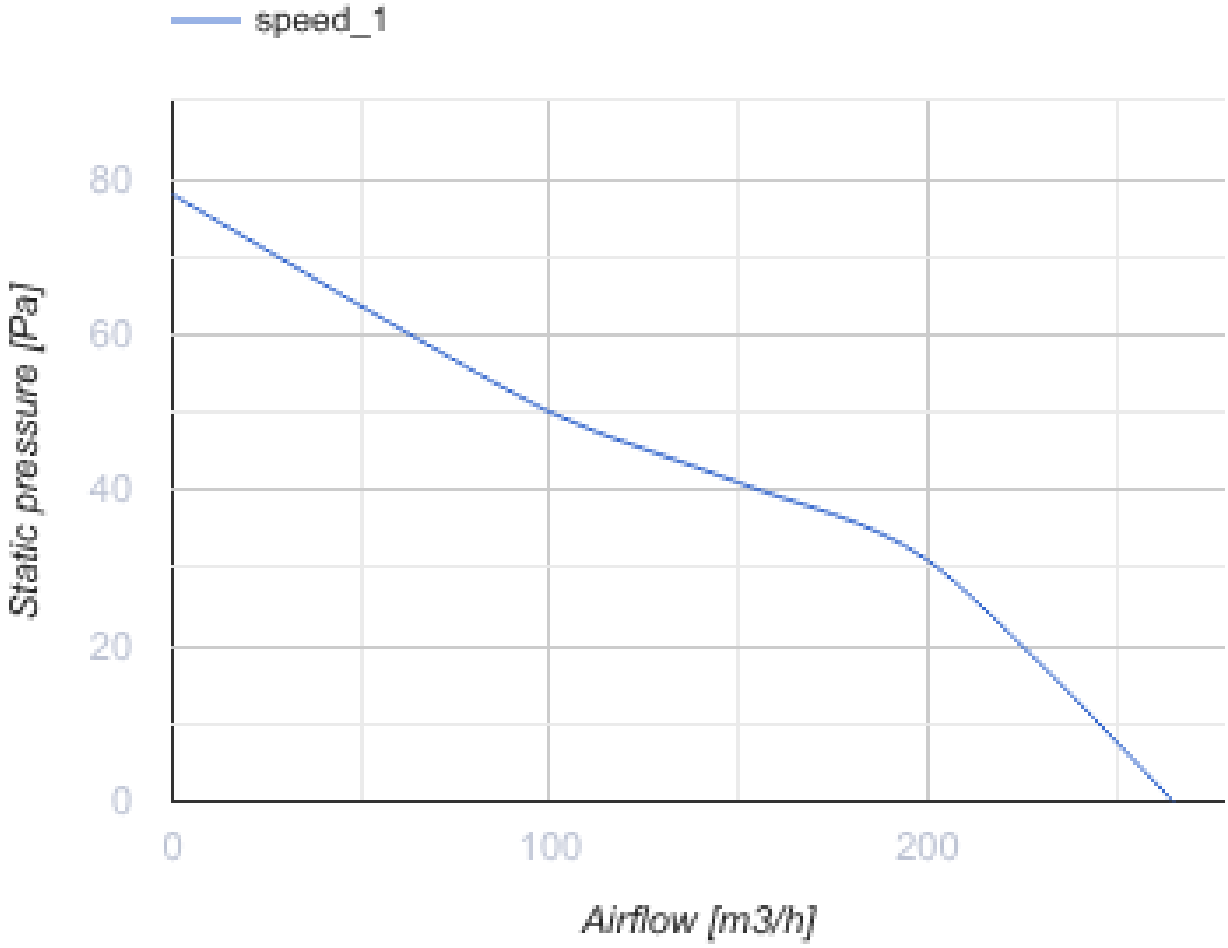

Dimensions

ØD	B	H	L	L1
150	206	165	154	36

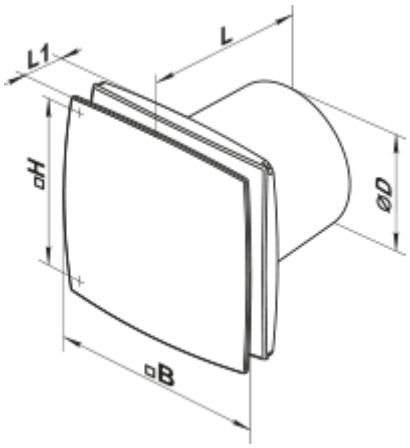

Accessories

Backdraft dampers

Name	Photo	Description
KO 150		Back valve is designed for domestic fan

Flanges

Name	Photo	Description
FO 150		The window flange

Ecodesign

Trademark	Vents					
Model	150 LD TH L					
Specific energy consumption (SEC) (kWh/(m²/a))	Cold		Average		Warm	
	-30.7	B	-14.3	E	-4.9	F
Type of ventilation unit	Unidirectional					
Type of drive installed	Single speed					
Type of heat recovery system	None					
Maximum flow rate (m³/h)	265					
Electric power input (W)	24					
Reference flow rate (m³/s)	0.052					
Specific power input (SPI) (W/(m³/h))	0.091					
Control typology	Manual control					
Maximum external leakage rates (%)	2.7					
Sound power level (dB(A))	57					
Declared typology	RVU UVU					
The annual electricity consumption (AEC) (kWh/a)	Cold		Average		Warm	
	113		113		113	
The annual heating saved (AHS) (kWh/a)	Cold		Average		Warm	
	3355		1715		776	