# 150 D turbo



Axial extract fans with thin front panels

- Sound pressure level LpA at 3 m: 40
- Casing material: Plastic

| | Unit of measurement | 150 D turbo |
|---|---|---|
| Connected air duct size | mm | 150 |
| Phases | - | 1 |
| Minimum supply voltage | V | 220 |
| Maximum supply voltage | V | 240 |
| Power supply frequency | Hz | 50 |
| Rated power | W | 30 |
| Unit current | A | 0.13 |
| Maximum airflow | $m^3/h$ | 341 |
| Rotation speed at 50hz | - | 2400 |
| Sound pressure level LpA at 3 m | dB(A) | 40 |
| Weight | kg | 1.06 |
| Ambient air temperature min | °C | 1 |
| Ambient air temperature max | °C | 40 |
| Ingress protection rating | - | IP34 |
| Impeller material | - | Plastic |

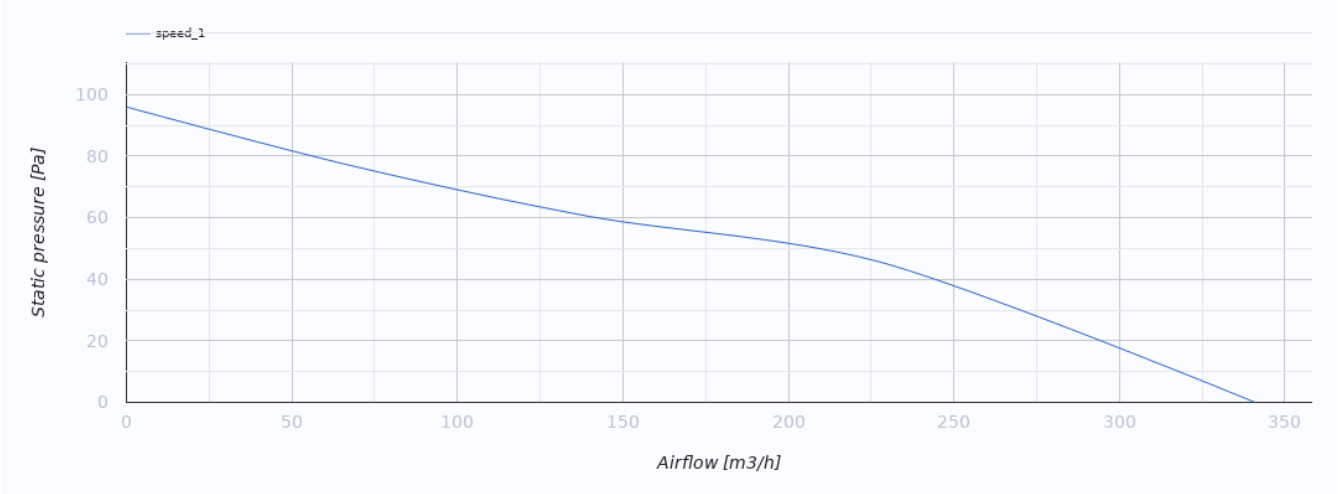


## Dimensions

| ØD | B | H | L | L1 |
|---|---|---|---|---|
| 150 | 205 | 165 | 132 | 13 |

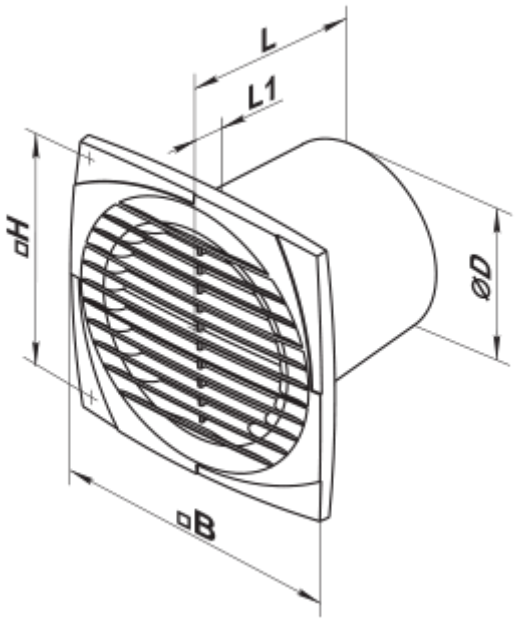


## Accessories

### Backdraft dampers

| Name | Photo | Description |
|---|---|---|
| KO 150 |  | Back valve is designed for domestic fan |

### Flanges

| Name | Photo | Description |
|---|---|---|
| FO 150 |  | The window flange |

## Ecodesign

| Trademark | Vents | | | | | |
|---|---|---|---|---|---|---|
| Model | 150 D turbo | | | | | |
| Specific energy consumption (SEC) (kWh/(m²/a)) | Cold | | Average | | Warm | |
| | -30.8 | B | -14.4 | E | -5 | F |
| Type of ventilation unit | Unidirectional | | | | | |
| Type of drive installed | Single speed | | | | | |
| Type of heat recovery system | None | | | | | |
| Maximum flow rate (m³/h) | 341 | | | | | |
| Electric power input (W) | 30 | | | | | |
| Reference flow rate (m³/s) | 0.066 | | | | | |
| Specific power input (SPI) (W/(m³/h)) | 0.088 | | | | | |
| Control typology | Manual control | | | | | |
| Maximum external leakage rates (%) | 2.7 | | | | | |
| Declared typology | RVU UVU | | | | | |
| Sound power level (dB(A)) | 60 | | | | | |
| The annual electricity consumption (AEC) (kWh/a) | Cold | | Average | | Warm | |
| | 110 | | 110 | | 110 | |
| The annual heating saved (AHS) (kWh/a) | Cold | | Average | | Warm | |
| | 3355 | | 1715 | | 776 | |