150 D TH



Axial extract fans with thin front panels

- Sound pressure level LpA at 3 m: 38
- Casing material: Plastic
- Humidity sensor
- Timer: Turn off timer

	Unit of measurement	150 D TH
Connected air duct size	mm	150
Phases	-	1
Minimum supply voltage	V	220
Maximum supply voltage	V	240
Power supply frequency	Hz	50
Rated power	W	24
Unit current	A	0.13
Maximum airflow	m^3/h	292
Rotation speed at 50hz	-	2400
Sound pressure level LpA at 3 m	dB(A)	38
Weight	kg	0.92
Ambient air temperature min	°C	1
Ambient air temperature max	°C	40
Ingress protection rating	-	IP34
Impeller material	-	Plastic

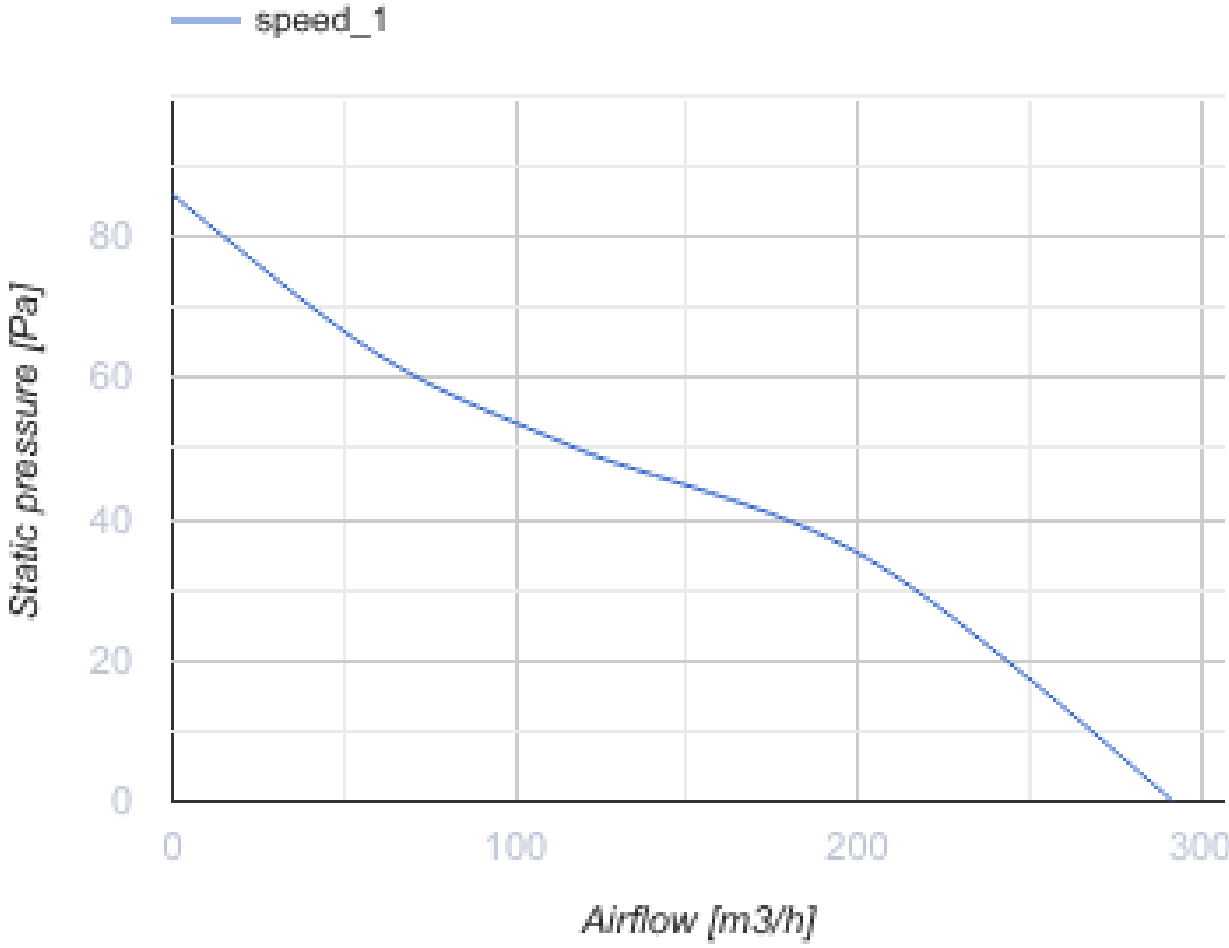

Dimensions

ØD	B	H	L	L1
150	205	165	132	13

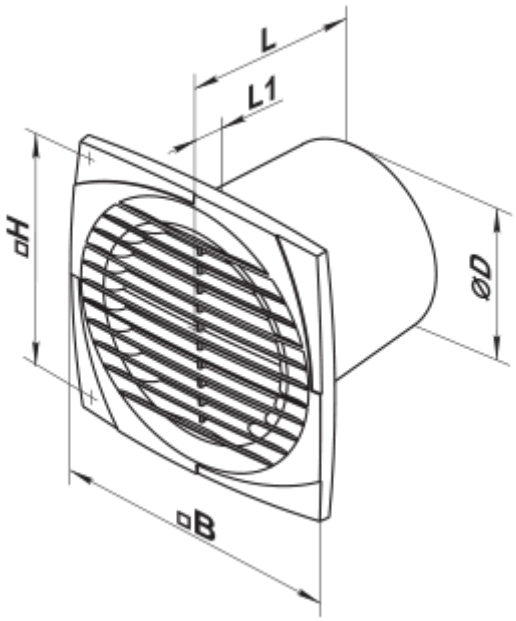

Accessories

Plastic

Name	Photo	Description
MV 150 V	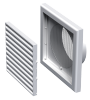	Two-piece plastic grilles with angled louvers, round flange

Fittings

Name	Photo	Description
PVT 050/10		The adhesive PVC tape is an insulation tape made of plasticized PVC base covered with a glue layer
PVT 050/30		The adhesive PVC tape is an insulation tape made of plasticized PVC base covered with a glue layer
PVT 050/50		The adhesive PVC tape is an insulation tape made of plasticized PVC base covered with a glue layer
C 150		The clamps are designed for quick and reliable mounting and connection of various round ventilation system components. Clamps are made of stainless steel band

Flat duct

Name	Photo	Description

3805		Wall mounting

Flexible ducts

Name	Photo	Description
Polyvent N		Flexible uninsulated air duct made of metallized film

Backdraft dampers

Name	Photo	Description
KO 150		Back valve is designed for domestic fan

Window vents

Name	Photo	Description
PO 400		Window ventilators for supply ventilation

Plastic

Name	Photo	Description
MV 152 VK		Supply and exhaust hoods

Metal

Name	Photo	Description
MVM 152 V N		Exhaust metal hoods

Ecodesign

Trademark	Vents					
Model	150 D TH					
Specific energy consumption (SEC) (kWh/(m²/a))	Cold		Average		Warm	
	-53.7	A+	-26.6	B	-11.1	E
Type of ventilation unit	Unidirectional					
Type of drive installed	Single speed					
Type of heat recovery system	None					
Maximum flow rate (m³/h)	292					
Electric power input (W)	24					
Reference flow rate (m³/s)	0.057					
Specific power input (SPI) (W/(m³/h))	0.082					
Control typology	Local demand control					
Maximum external leakage rates (%)	2.7					
Declared typology	RVU UVU					
Sound power level (dB(A))	58					
The annual electricity consumption (AEC) (kWh/a)	Cold		Average		Warm	
	67		67		67	
The annual heating saved (AHS) (kWh/a)	Cold		Average		Warm	
	5536		2830		1280	