# 125 VKO1



Axial high-performance inline fans for extract or supply ventilation with high performance

- Sound pressure level LpA at 3 m: 38
- Casing material: Plastic

| | Unit of measurement | 125 VKO1 |
|---|---|---|
| Connected air duct size | mm | 125 |
| Phases | - | 1 |
| Minimum supply voltage | V | 220 |
| Maximum supply voltage | V | 240 |
| Power supply frequency | Hz | 50/60 |
| Rated power | W | 16 |
| Unit current | A | 0.1 |
| Maximum airflow | $m^3/h$ | 190 |
| Rotation speed at 50hz | - | 2400 |
| Sound pressure level LpA at 3 m | dB(A) | 38 |
| Weight | kg | 0.43 |
| Ambient air temperature min | °C | 1 |
| Ambient air temperature max | °C | 40 |
| Ingress protection rating | - | IPX4 |
| Impeller material | - | Plastic |

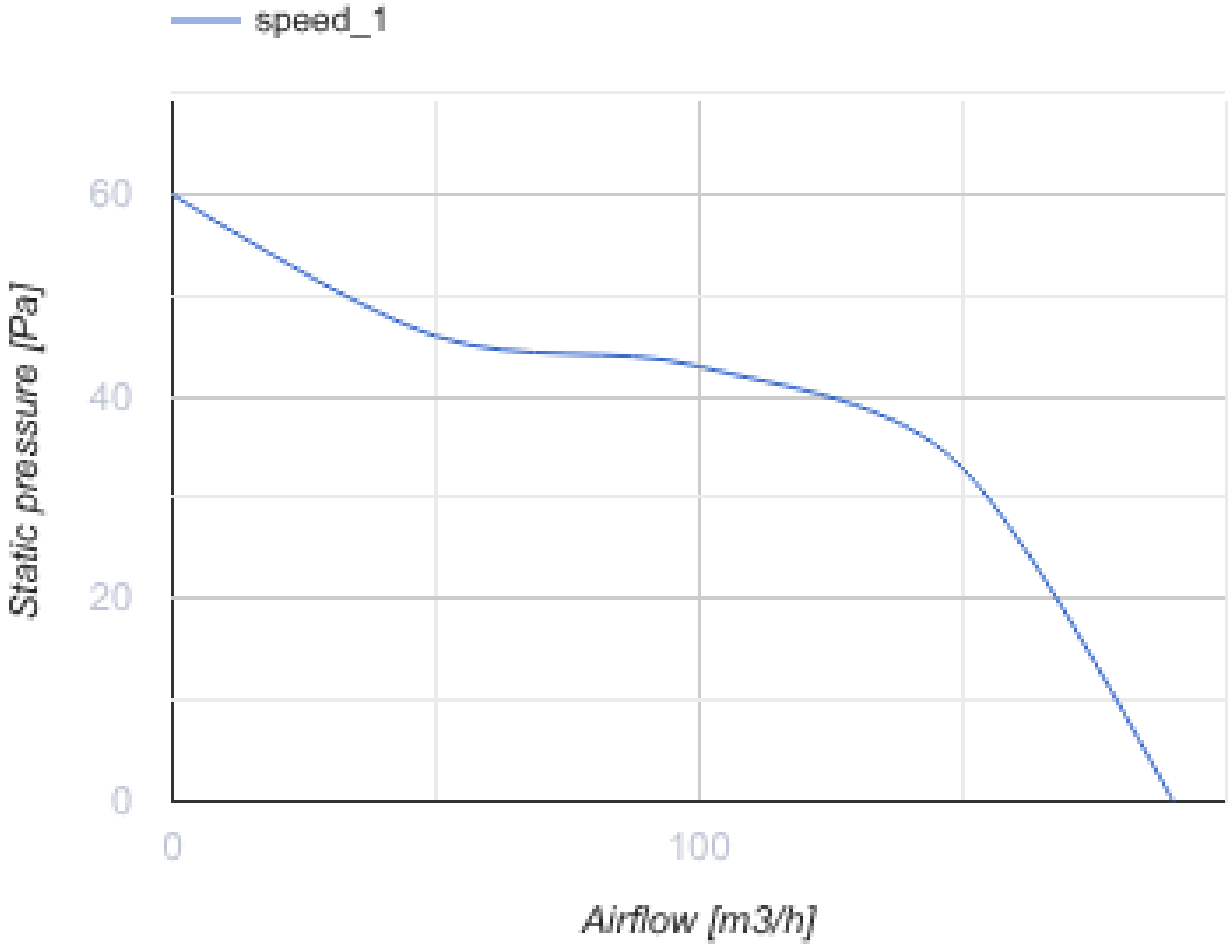


## Dimensions

| ØD | Ød | L | L1 |
|---|---|---|---|
| 125 | 59 | 90 | 28 |

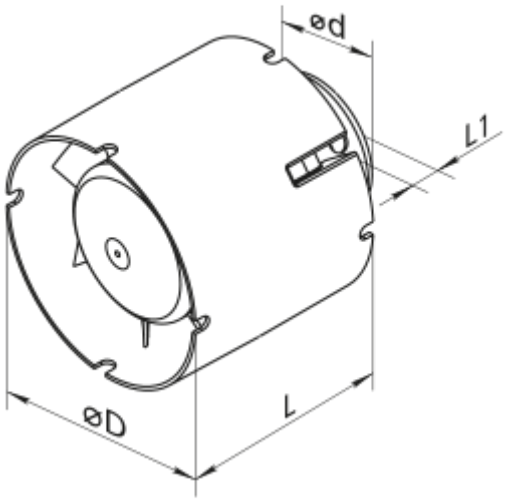

## Ecodesign

| Trademark | Vents | | | | | |
|---|---|---|---|---|---|---|
| Model | 125 VKO1 | | | | | |
| Specific energy consumption (SEC) (kWh/(m²/a)) | Cold | | Average | | Warm | |
| | -32 | B | -15 | E | -6 | F |
| Type of ventilation unit | Unidirectional | | | | | |
| Type of drive installed | Multi-speed | | | | | |
| Type of heat recovery system | None | | | | | |
| Maximum flow rate (m³/h) | 190 | | | | | |
| Electric power input (W) | 16 | | | | | |
| Reference flow rate (m³/s) | 0.037 | | | | | |
| Specific power input (SPI) (W/(m³/h)) | 0.054 | | | | | |
| Control typology | Manual control | | | | | |
| Maximum external leakage rates (%) | 2.7 | | | | | |
| Declared typology | RVU UVU | | | | | |
| Sound power level (dB(A)) | 58 | | | | | |
| The annual electricity consumption (AEC) (kWh/a) | Cold | | Average | | Warm | |
| | 100 | | 100 | | 100 | |
| The annual heating saved (AHS) (kWh/a) | Cold | | Average | | Warm | |
| | 3400 | | 1700 | | 800 | |