125 Solid T Black Sapphire

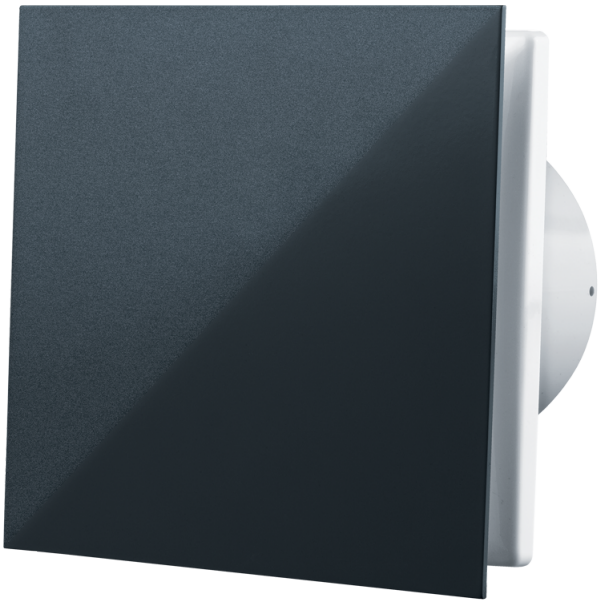

Axial decorative fans for extract ventilation

- Sound pressure level LpA at 3 m: 32
- Casing material: Plastic
- Backdraft protection: Backdraft damper
- Timer: Turn off timer

	Unit of measurement	125 Solid T Black Sapphire
Connected air duct size	mm	125
Phases	-	1
Minimum supply voltage	V	220
Maximum supply voltage	V	240
Power supply frequency	Hz	50
Rated power	W	18
Unit current	A	0.11
Maximum airflow	m^3/h	155
Rotation speed at 50hz	-	2200
Sound pressure level LpA at 3 m	dB(A)	32
Weight	kg	0.75
Ambient air temperature min	°C	1
Ambient air temperature max	°C	45
Ingress protection rating	-	IP44
Impeller material	-	Plastic

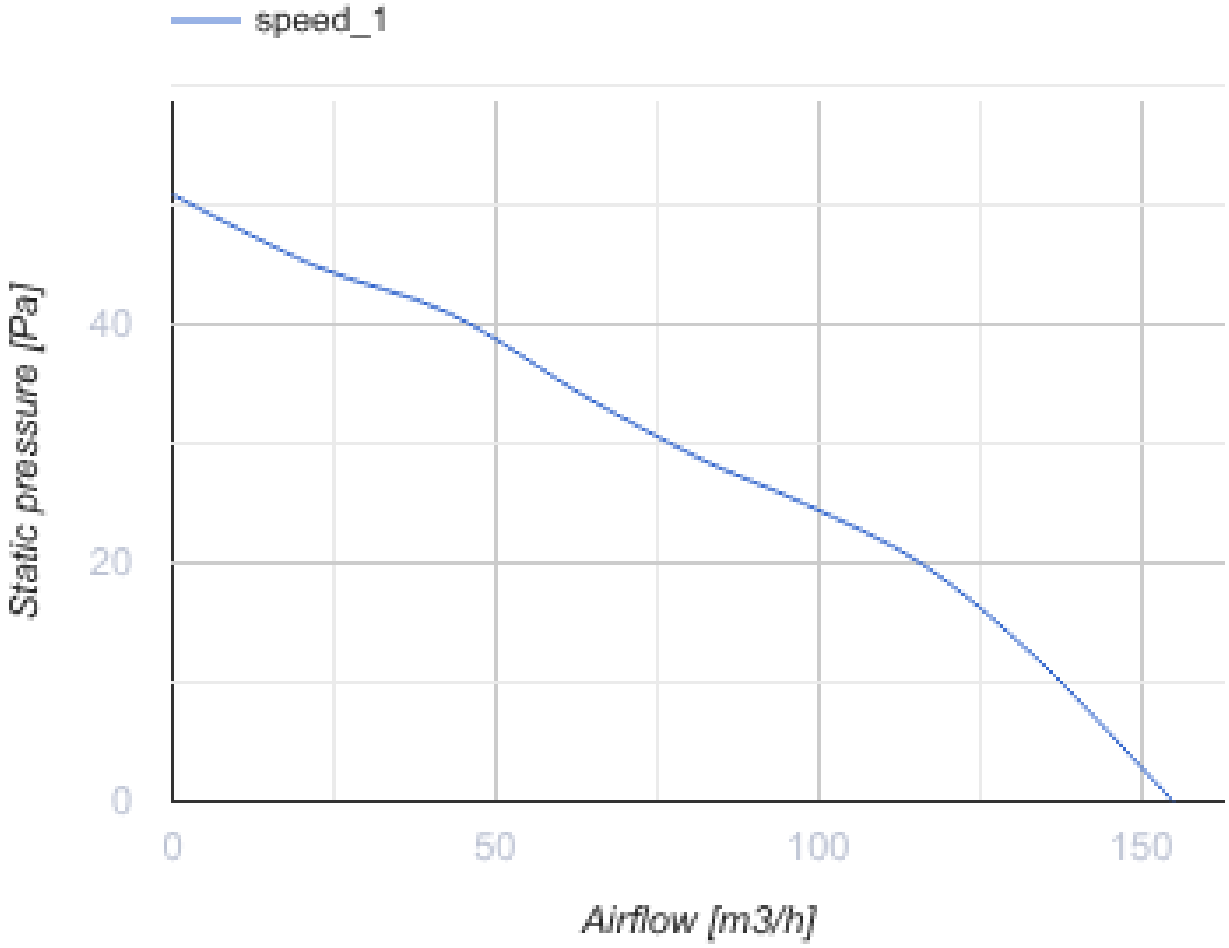

Dimensions

Ø D	B	L	L1
123.5	180	85	38

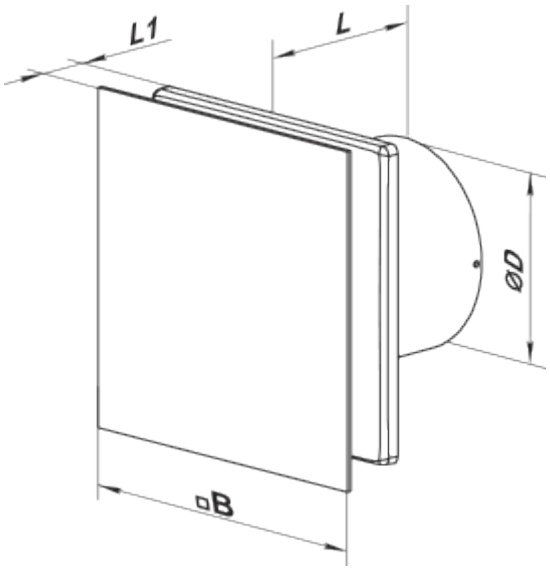

Accessories

Plastic

Name	Photo	Description
MV 120 V		Two-piece plastic grilles with angled louvers

Fittings

Name	Photo	Description
PVT 050/10		The adhesive PVC tape is an insulation tape made of plasticized PVC base covered with a glue layer
PVT 050/30		The adhesive PVC tape is an insulation tape made of plasticized PVC base covered with a glue layer
PVT 050/50		The adhesive PVC tape is an insulation tape made of plasticized PVC base covered with a glue layer
C 125		The clamps are designed for quick and reliable mounting and connection of various round ventilation system components. Clamps are made of stainless steel band

Flat duct

Name	Photo	Description
2805		Wall mounting

Flexible ducts

Name	Photo	Description
Polyvent N		Flexible uninsulated air duct made of metallized film

Backdraft dampers

Name	Photo	Description
KO 125		Back valve is designed for domestic fan

Window vents

Name	Photo	Description
PO 400		Window ventilators for supply ventilation

Plastic

Name	Photo	Description
MV 122 VK		Supply and exhaust hoods

Metal

Name	Photo	Description
MVM 122 V N		Exhaust metal hoods