# 125 Silenta-S




Quiet axial extract fans with thin front panels

- Sound pressure level LpA at 3 m: 31
- Impeller type: Axial
- Casing material: Plastic

| | Unit of measurement | 125 Silenta-S |
|---|---|---|
| Connected air duct size | mm | 125 |
| Minimum supply voltage | V | 220 |
| Maximum supply voltage | V | 240 |
| Power supply frequency | Hz | 50/60 |
| Rated power | W | 9.3 |
| Unit current | A | 0.06 |
| Maximum airflow | $m^3/h$ | 148 |
| Sound pressure level LpA at 3 m | dB(A) | 31 |
| Weight | kg | 0.69 |
| Ambient air temperature min | °C | 1 |
| Ambient air temperature max | °C | 40 |
| Ingress protection rating | - | IP34 |
| Impeller material | - | Plastic |

## Dimensions

| Ø D | B | H | L | L1 |
|---|---|---|---|---|
| 125 | 176 | 140 | 114 | 13 |

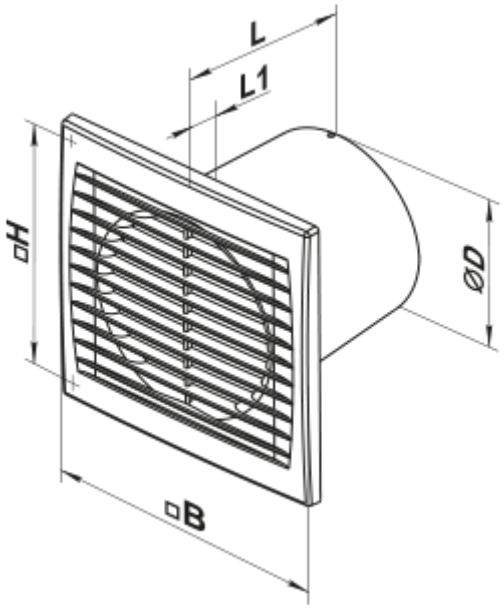


## Accessories

### Plastic

| Name | Photo | Description |
|---|---|---|
| MV 120 V |  | Two-piece plastic grilles with angled louvers |

### Fittings

| Name | Photo | Description |
|---|---|---|
| PVT 050/10 |  | The adhesive PVC tape is an insulation tape made of plasticized PVC base covered with a glue layer |
| PVT 050/30 |  | The adhesive PVC tape is an insulation tape made of plasticized PVC base covered with a glue layer |
| PVT 050/50 |  | The adhesive PVC tape is an insulation tape made of plasticized PVC base covered with a glue layer |
| C 125 |  | The clamps are designed for quick and reliable mounting and connection of various round ventilation system components. Clamps are made of stainless steel band |

### Flat duct

| Name | Photo | Description |
|---|---|---|
| 2805 |  | Wall mounting |

### Flexible ducts

| Name | Photo | Description |
|---|---|---|
| Polyvent N |  | Flexible uninsulated air duct made of metallized film |

### Backdraft dampers

| Name | Photo | Description |
|---|---|---|
| KO 125 |  | Back valve is designed for domestic fan |

### Window vents

| Name | Photo | Description |
|---|---|---|
| PO 400 |  | Window ventilators for supply ventilation |

### Plastic

| Name | Photo | Description |
|---|---|---|
| MV 122 VK |  | Supply and exhaust hoods |

### Metal

| Name | Photo | Description |
|---|---|---|
| MVM 122 V N |  | Exhaust metal hoods |

## Ecodesign

| Trademark | Vents | | | | | |
|---|---|---|---|---|---|---|
| Model | 125 Silenta-S | | | | | |
| Specific energy consumption (SEC) (kWh/(m²/a)) | Cold | | Average | | Warm | |
| | -32 | B | -16 | E | -6 | F |
| Type of ventilation unit | Unidirectional | | | | | |
| Type of drive installed | Multi-speed | | | | | |
| Type of heat recovery system | None | | | | | |
| Maximum flow rate (m³/h) | 148 | | | | | |
| Electric power input (W) | 9.3 | | | | | |
| Reference flow rate (m³/s) | 0.029 | | | | | |
| Specific power input (SPI) (W/(m³/h)) | 0.04 | | | | | |
| Control typology | Manual control | | | | | |
| Maximum external leakage rates (%) | 2.7 | | | | | |
| Sound power level (dB(A)) | 51 | | | | | |
| Declared typology | RVU UVU | | | | | |
| The annual electricity consumption (AEC) (kWh/a) | Cold | | Average | | Warm | |
| | 100 | | 100 | | 100 | |
| The annual heating saved (AHS) (kWh/a) | Cold | | Average | | Warm | |
| | 3400 | | 1700 | | 800 | |