125 Silenta-MT



Quiet axial extract fans

- Sound pressure level LpA at 3 m: 31
- Impeller type: Axial
- Casing material: Plastic
- Timer: Turn off timer

	Unit of measurement	125 Silenta-MT
Connected air duct size	mm	125
Maximum supply voltage	V	240
Minimum supply voltage	V	220
Power supply frequency	Hz	50/60
Rated power	W	9.1
Unit current	A	0.059
Maximum airflow	m^3/h	152
Sound pressure level LpA at 3 m	dB(A)	31
Weight	kg	0.63
Ambient air temperature max	°C	40
Ambient air temperature min	°C	1
Ingress protection rating	-	IP34
Impeller material	-	Plastic

Dimensions

Ø D	B	H	L	L1
125	180	150	94	25

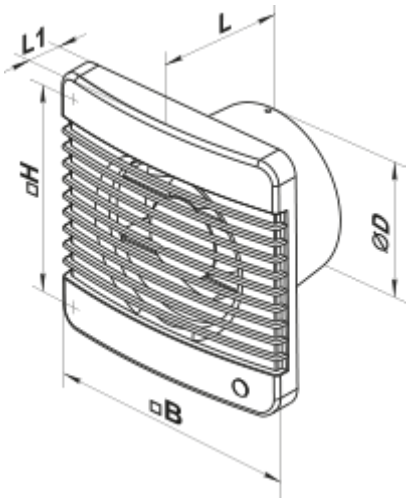

Accessories

Plastic

Name	Photo	Description
MV 120 V		Two-piece plastic grilles with angled louvers

Fittings

Name	Photo	Description
PVT 050/10		The adhesive PVC tape is an insulation tape made of plasticized PVC base covered with a glue layer
PVT 050/30		The adhesive PVC tape is an insulation tape made of plasticized PVC base covered with a glue layer
PVT 050/50		The adhesive PVC tape is an insulation tape made of plasticized PVC base covered with a glue layer
C 125		The clamps are designed for quick and reliable mounting and connection of various round ventilation system components. Clamps are made of stainless steel band

Flat duct

Name	Photo	Description
2805		Wall mounting

Flexible ducts

Name	Photo	Description

Polyvent N		Flexible uninsulated air duct made of metallized film

Backdraft dampers

Name	Photo	Description
KO 125		Back valve is designed for domestic fan

Plastic

Name	Photo	Description
MV 122 VK		Supply and exhaust hoods

Metal

Name	Photo	Description
MVM 122 V N		Exhaust metal hoods

Ecodesign

Trademark	Vents					
Model	125 Silenta-MT					
Specific energy consumption (SEC) (kWh/(m²/a))	Cold		Average		Warm	
	-35.5	A	-17.6	E	-7.3	F
Type of ventilation unit	Unidirectional					
Type of drive installed	Multi-speed					
Type of heat recovery system	None					
Maximum flow rate (m³/h)	148					
Electric power input (W)	9.3					
Reference flow rate (m³/s)	0.029					
Specific power input (SPI) (W/(m³/h))	0.04					
Control typology	Clock control					
Maximum external leakage rates (%)	2.7					
Declared typology	RVU UVU					
Sound power level (dB(A))	51					
The annual electricity consumption (AEC) (kWh/a)	Cold		Average		Warm	
	47		47		47	
The annual heating saved (AHS) (kWh/a)	Cold		Average		Warm	
	3667		1874		848	