# 125 Silenta-M K




Quiet axial extract fans

- Sound pressure level LpA at 3 m: 31
- Impeller type: Axial
- Casing material: Plastic
- Backdraft protection: Backdraft damper

| | Unit of measurement | 125 Silenta-M K |
|---|---|---|
| Connected air duct size | mm | 125 |
| Maximum supply voltage | V | 240 |
| Minimum supply voltage | V | 220 |
| Power supply frequency | Hz | 50/60 |
| Rated power | W | 9.1 |
| Unit current | A | 0.059 |
| Maximum airflow | $m^3/h$ | 152 |
| Sound pressure level LpA at 3 m | dB(A) | 31 |
| Weight | kg | 0.63 |
| Ambient air temperature max | °C | 40 |
| Ambient air temperature min | °C | 1 |
| Ingress protection rating | - | IP34 |
| Impeller material | - | Plastic |

## Dimensions

| Ø D | B | H | L | L1 |
|---|---|---|---|---|
| 125 | 180 | 150 | 94 | 25 |

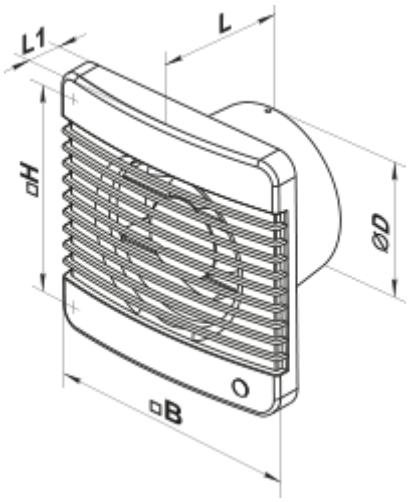


## Accessories

### Plastic

| Name | Photo | Description |
|---|---|---|
| MV 120 V |  | Two-piece plastic grilles with angled louvers |

### Fittings

| Name | Photo | Description |
|---|---|---|
| PVT 050/10 |  | The adhesive PVC tape is an insulation tape made of plasticized PVC base covered with a glue layer |
| PVT 050/30 |  | The adhesive PVC tape is an insulation tape made of plasticized PVC base covered with a glue layer |
| PVT 050/50 |  | The adhesive PVC tape is an insulation tape made of plasticized PVC base covered with a glue layer |
| C 125 |  | The clamps are designed for quick and reliable mounting and connection of various round ventilation system components. Clamps are made of stainless steel band |

### Flat duct

| Name | Photo | Description |
|---|---|---|
| 2805 |  | Wall mounting |

### Flexible ducts

| Name | Photo | Description |
|---|---|---|

| | | |
|---|---|---|
| Polyvent N |  | Flexible uninsulated air duct made of metallized film |

### Window vents

| Name | Photo | Description |
|---|---|---|
| PO 400 |  | Window ventilators for supply ventilation |

### Plastic

| Name | Photo | Description |
|---|---|---|
| MV 122 VK |  | Supply and exhaust hoods |

### Metal

| Name | Photo | Description |
|---|---|---|
| MVM 122 V N |  | Exhaust metal hoods |