125 MAO1 turbo



Axial window fans for extract ventilation with automatic shutters

- Sound pressure level LpA at 3 m: 37
- Casing material: Plastic

	Unit of measurement	125 MAO1 turbo
Connected air duct size	mm	125
Phases	-	1
Minimum supply voltage	V	220
Maximum supply voltage	V	240
Power supply frequency	Hz	50
Rated power	W	24
Unit current	A	0.105
Maximum airflow	m³/h	232
Rotation speed at 50hz	-	2400
Sound pressure level LpA at 3 m	dB(A)	37
Weight	kg	1.31
Ambient air temperature min	°C	1
Ambient air temperature max	°C	40
Ingress protection rating	-	IP24
Impeller material	-	Plastic

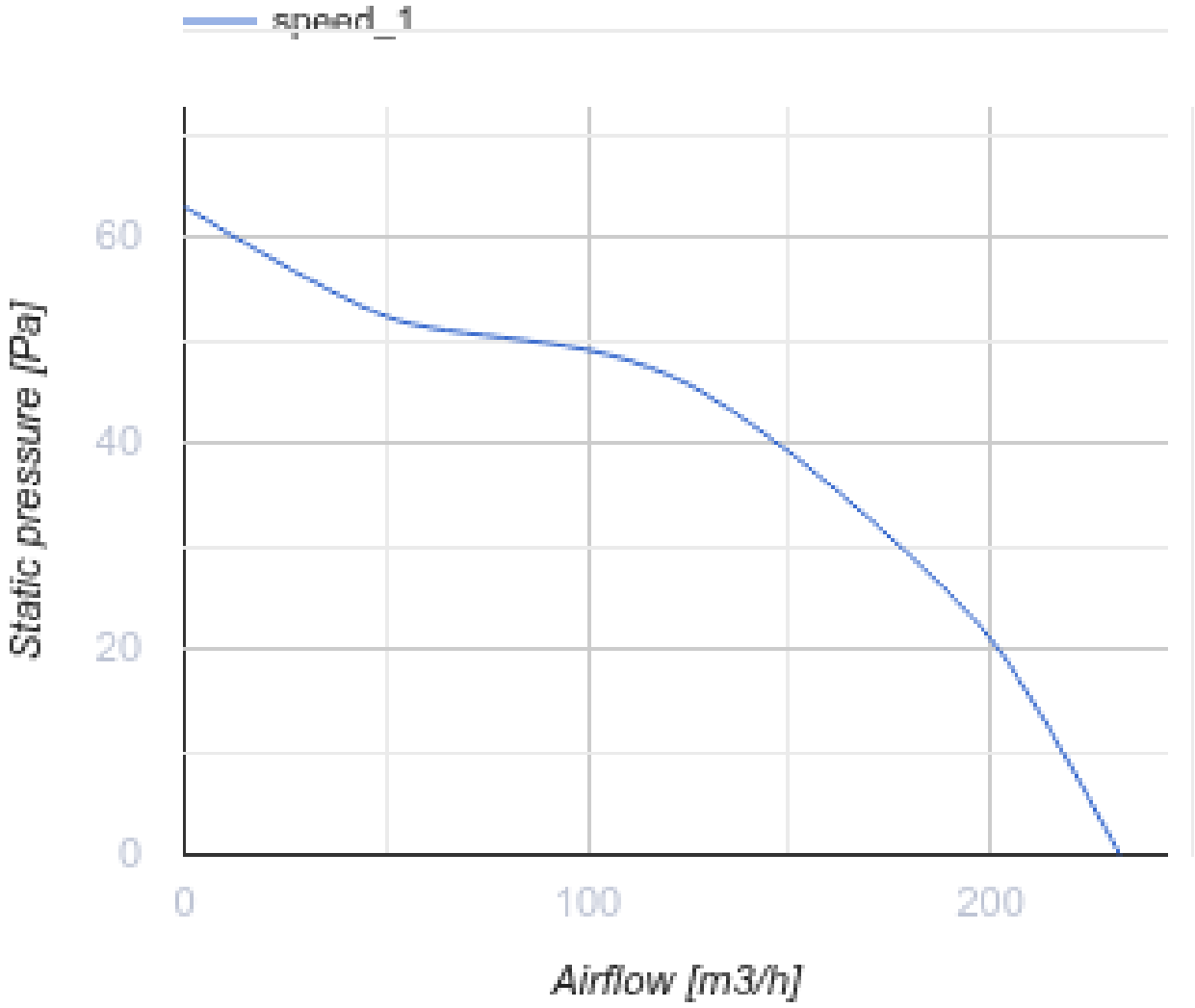

Dimensions

Ø D	B	H	L1	L2
125	190	173	58	53

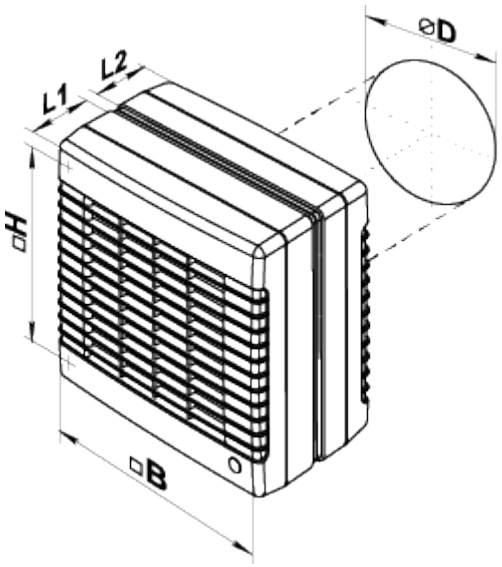
⌀D
L2
L1
□H
□B